Cross block with a corner cut

KherveCAD tutorial – Exercise 1

Drawing

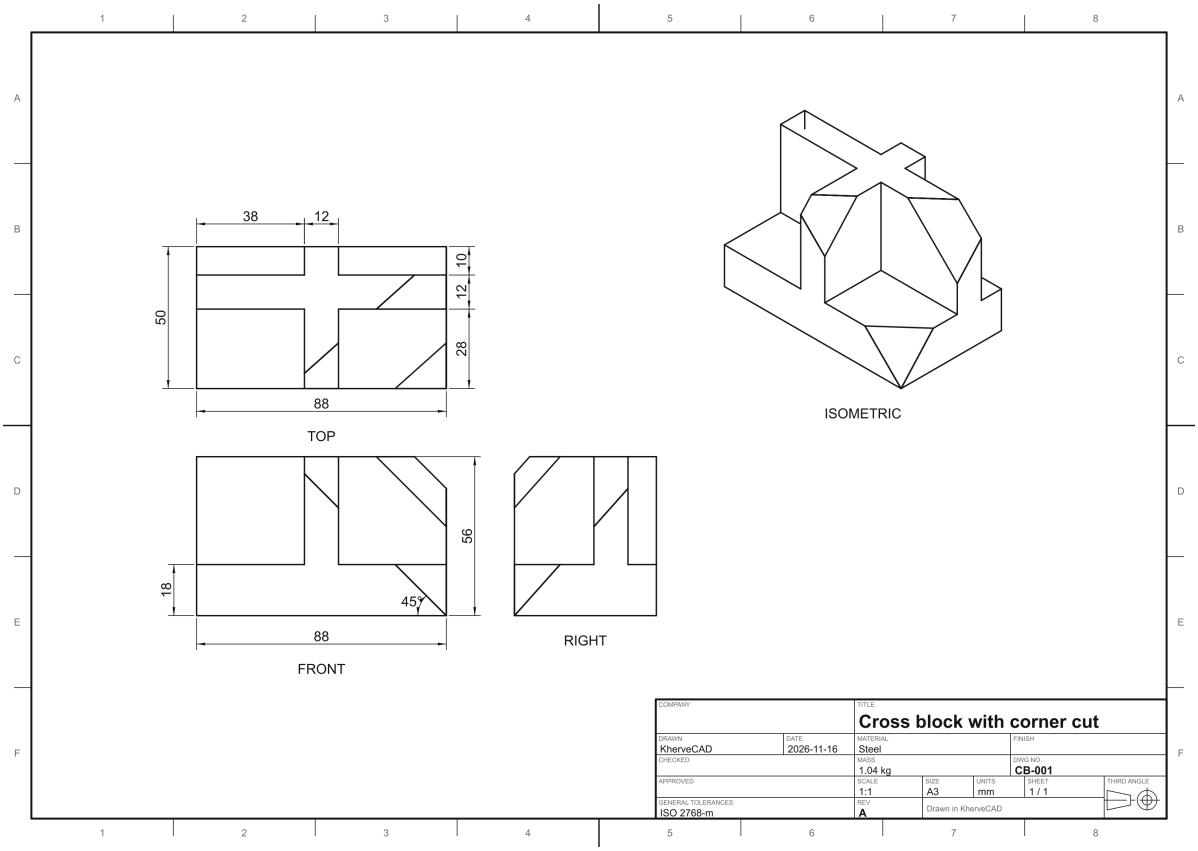

The part

88 × 50 × 56 mm: a base block, a cross standing on it, one corner cut by a sloping plane.

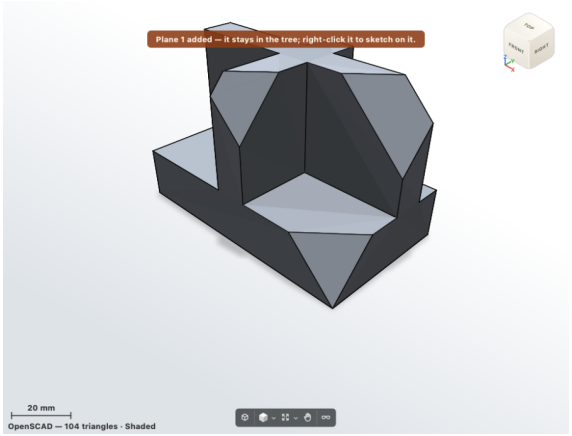

Boss-Extrude1

Extruded Boss/Base → click the **Top Plane**.
Center Rectangle → click the origin → drag.
Smart Dimension → top line **88** → side **50**.

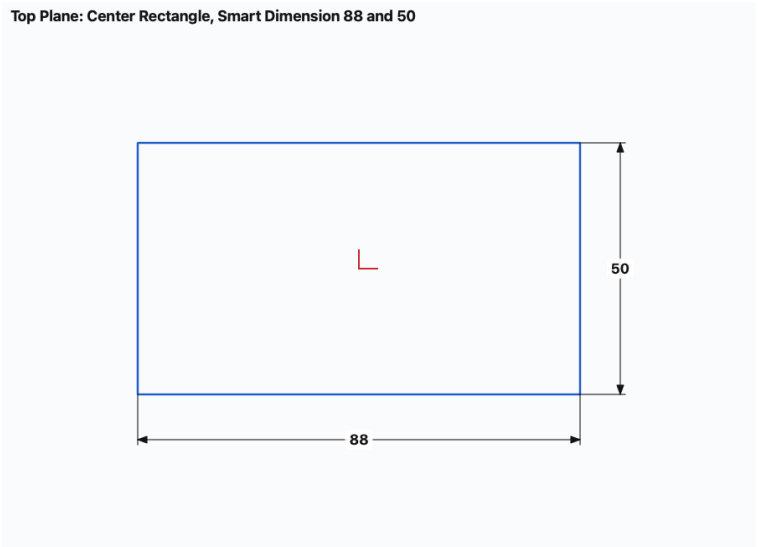

Exit Sketch → **18** → OK.

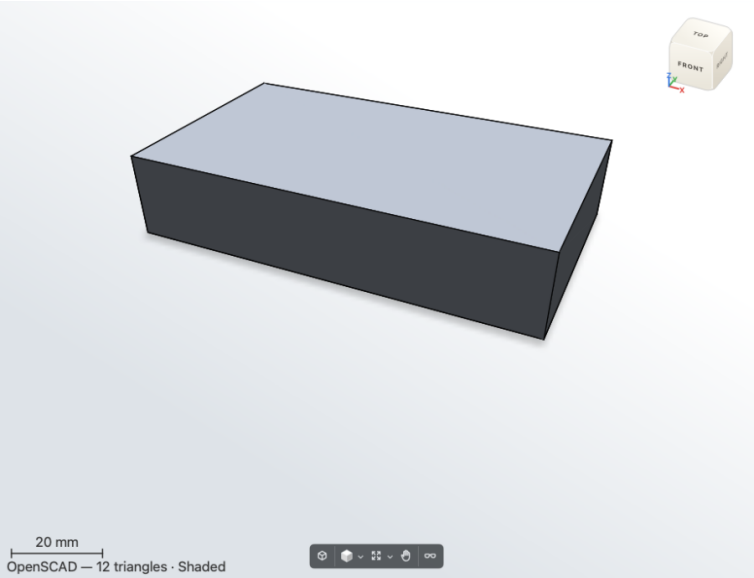

Boss-Extrude2: the cross

Extruded Boss/Base → click the base's **top face**.

Line → two upright lines, two lines across, edge to edge.

Smart Dimension → between the uprights **12** → between the two across **12** → left edge to the first upright **38** → back edge to the first across **10**.

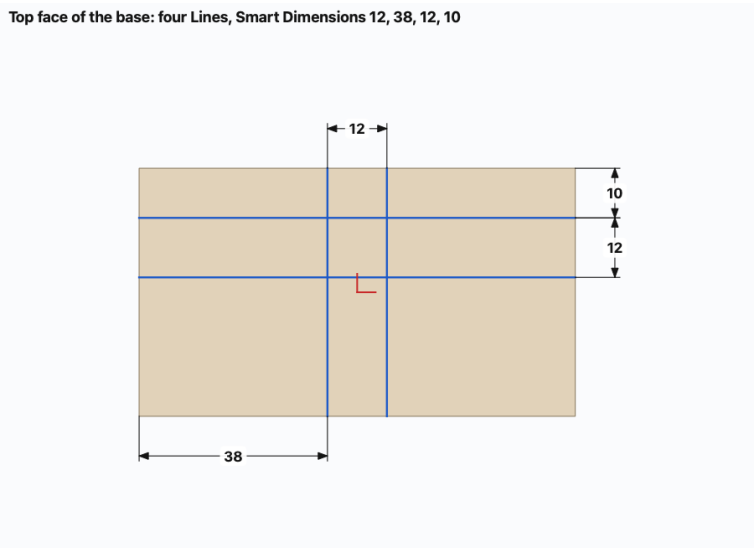

Exit Sketch → click the **five areas** of the cross → **38** → OK.

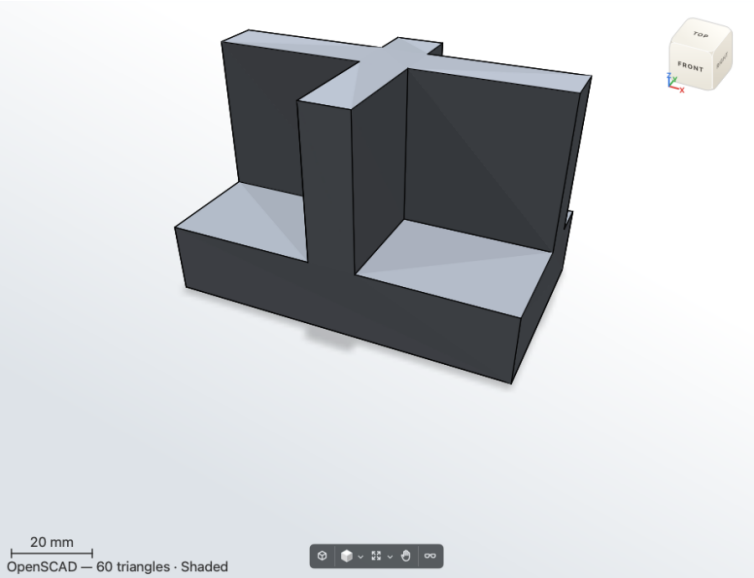

Sketch3: construction rectangle

Sketch → click the **top of the cross**.

Center Rectangle → origin → base corner. Select it → tick **For construction**.
Exit Sketch.

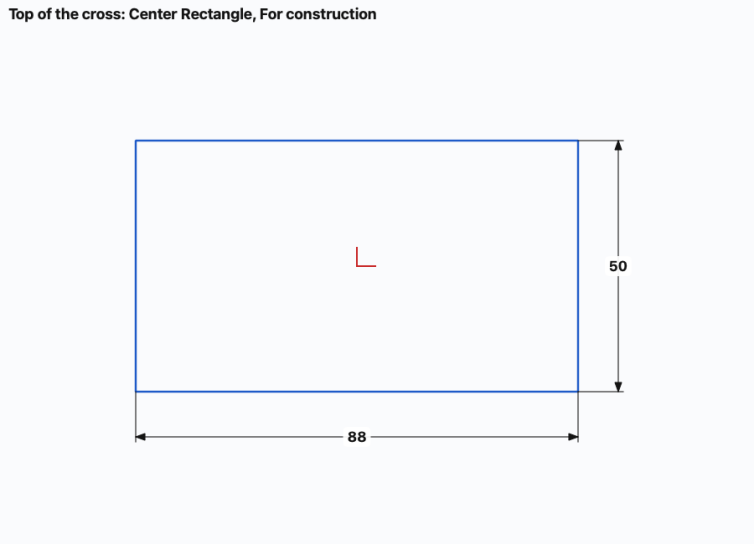

Sketch4: the 45° line

Sketch → click the **front face**.

Line → bottom right corner → up to the top level, left of the cross. Tick **For construction**.

Smart Dimension → top end → bottom edge **56**. **Smart Dimension** → line → bottom edge **45**.
Exit Sketch.

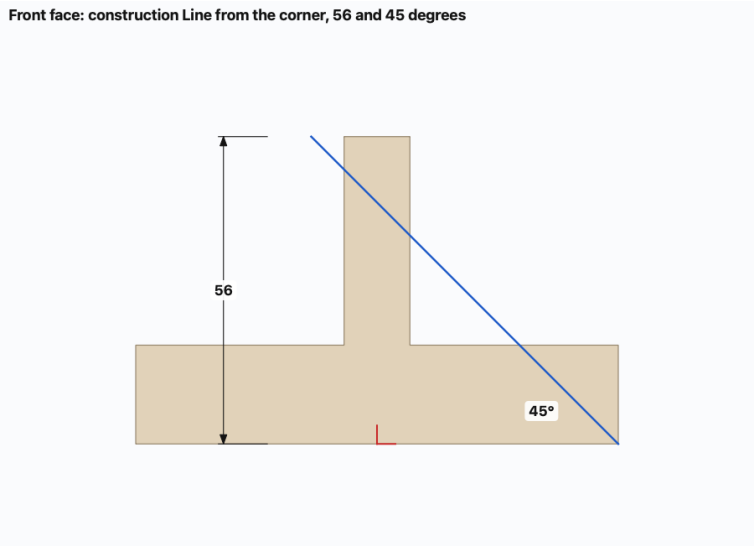

Plane1

Reference Geometry → **Plane**.
Click the back right corner of the rectangle → the bottom front corner → the end of the 45° line → OK.

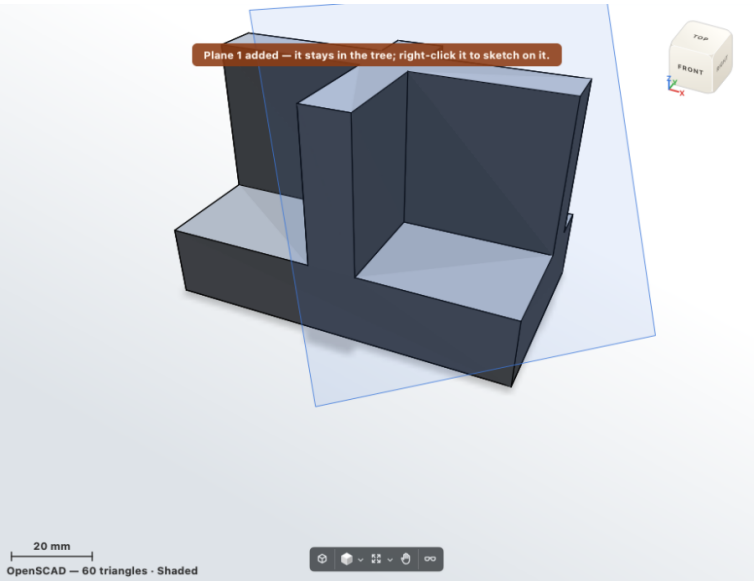

Cut-Extrude1

Sketch → select **Plane1** in the tree → click Sketch.
Line → A → B → C → back to A (the three plane points). **Exit Sketch**.

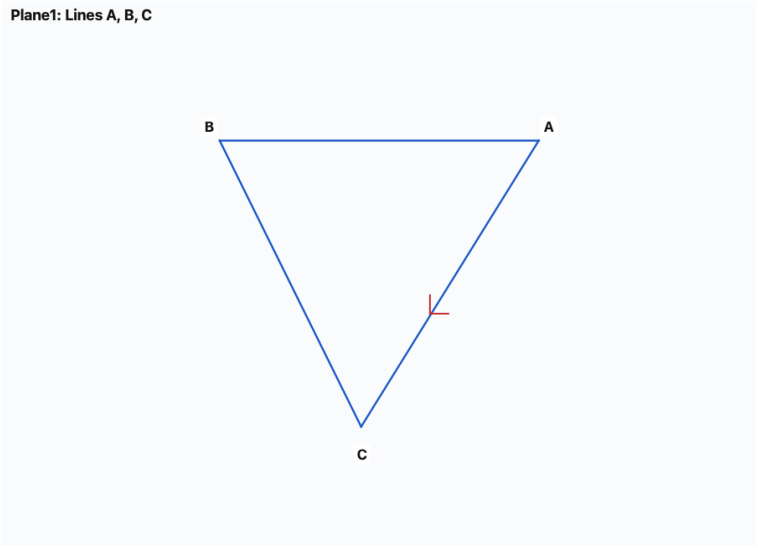

Extruded Cut → click **inside the triangle** → OK.
Direction **One side** → End condition **Blind** → **58** → tick **Reverse** → OK.

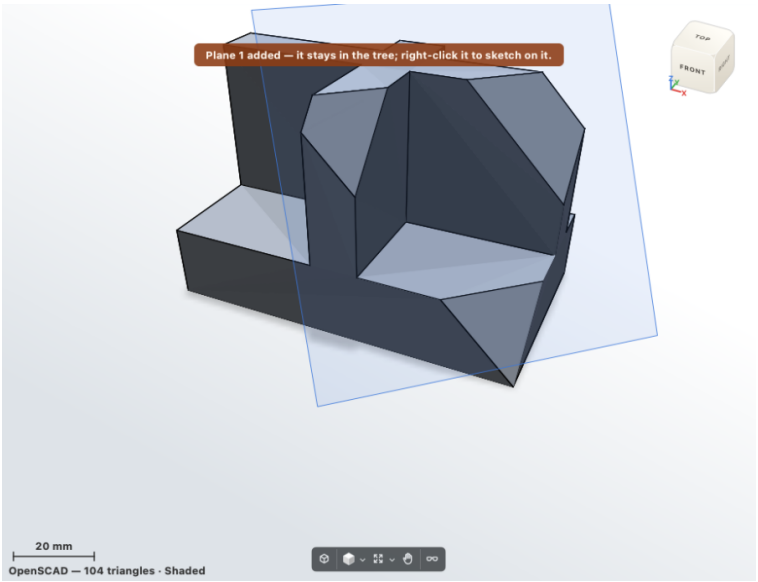

Hide Plane1 and the sketches.

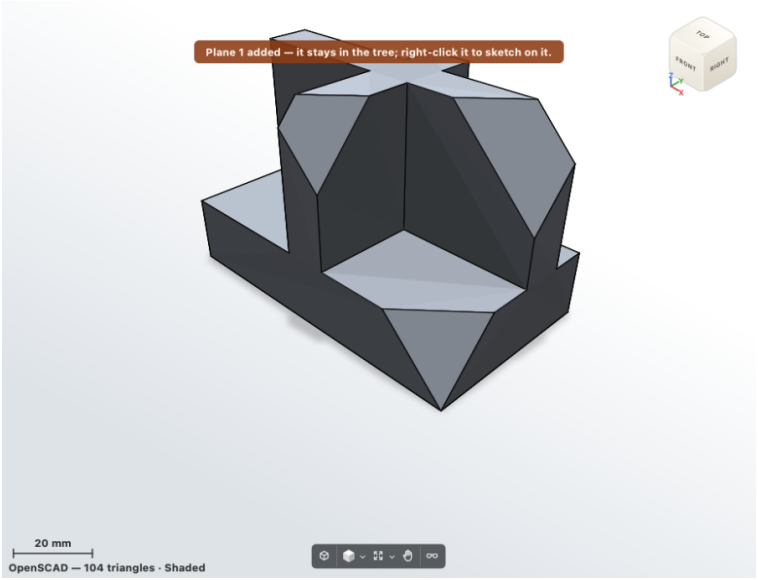
Plane 1 added — it stays in the tree; right-click it to sketch on it.
TOP
FRONT
RIGHT
20 mm
OpenSCAD — 104 triangles · Shaded