# Bearing bracket

Built in KherveCAD with the mouse, step by step, as in the video youtube.com/watch?v=3RVgPjESfGA. Each numbered line is one action; its picture shows the screen once it is done (the button used is outlined, the pointer shows where to click).

## The drawing

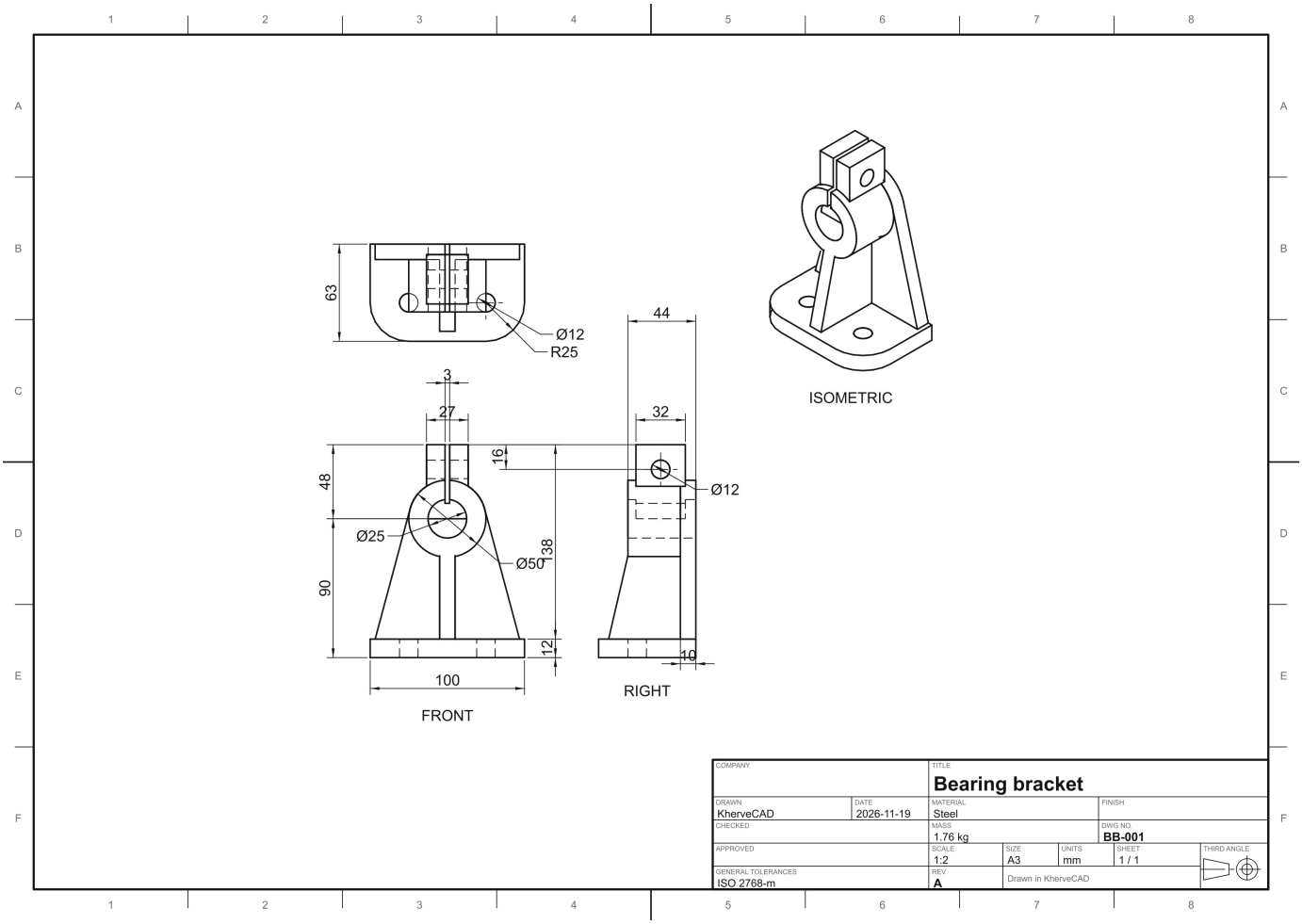


## The part

This is the part we will make: a bearing bracket. A base plate with two holes, an upright, a bored boss, a split clamping block on top and a rib.

# Bearing bracket

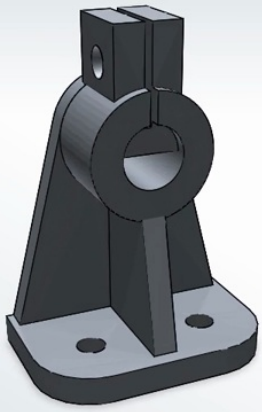

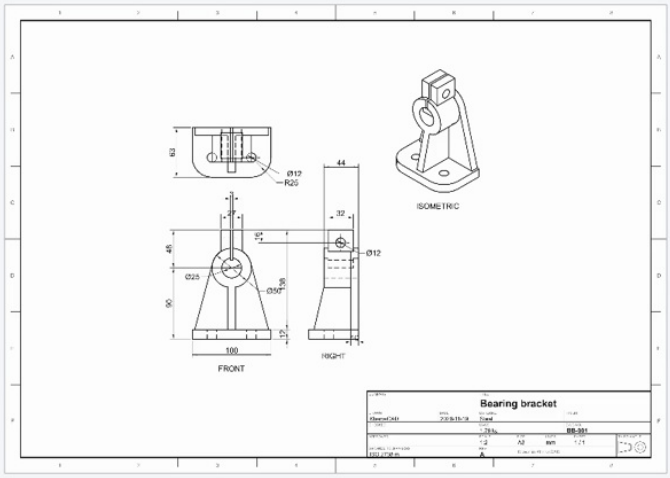


This is the part we will make: a bearing bracket. A base plate with two holes, an upright, a bored boss, a split clamping block on top and a rib.

# Step 1

**The base plate: one hundred by sixty three, twelve thick.**

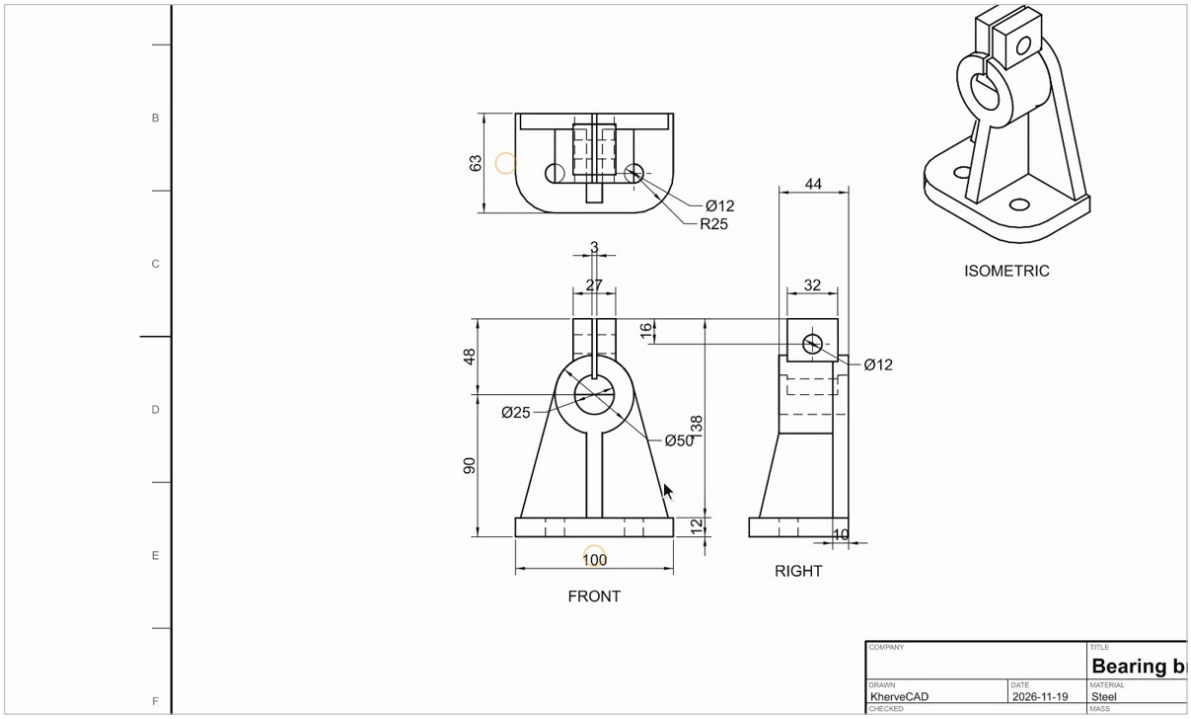


1. Click the Top Plane in the tree, then Sketch.

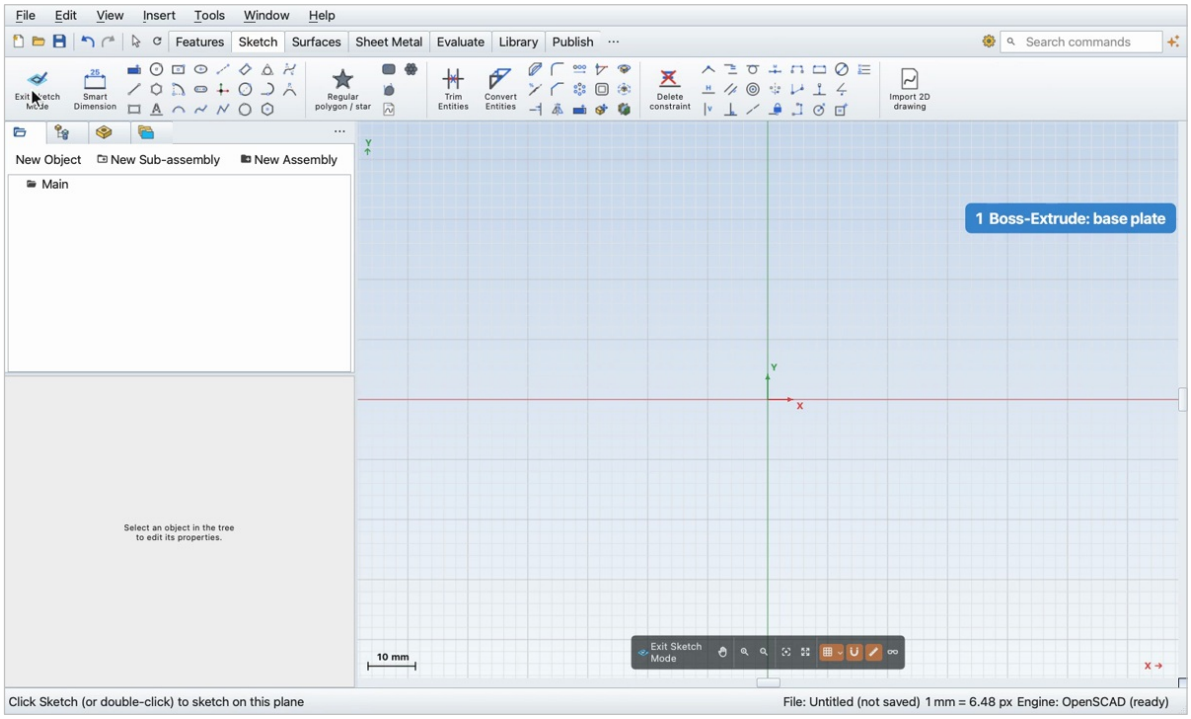

2. Center Rectangle: click the origin, then drag out a corner.

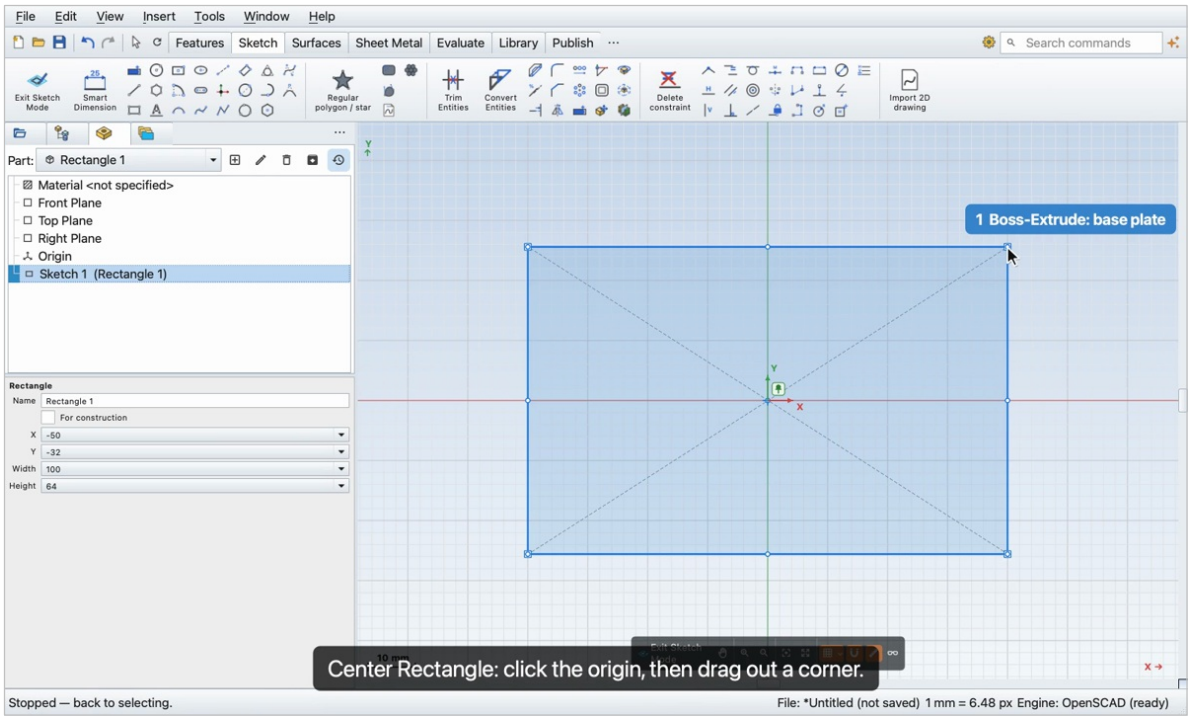


3. Smart Dimension: the top edge, one hundred, then the right edge, sixty three.

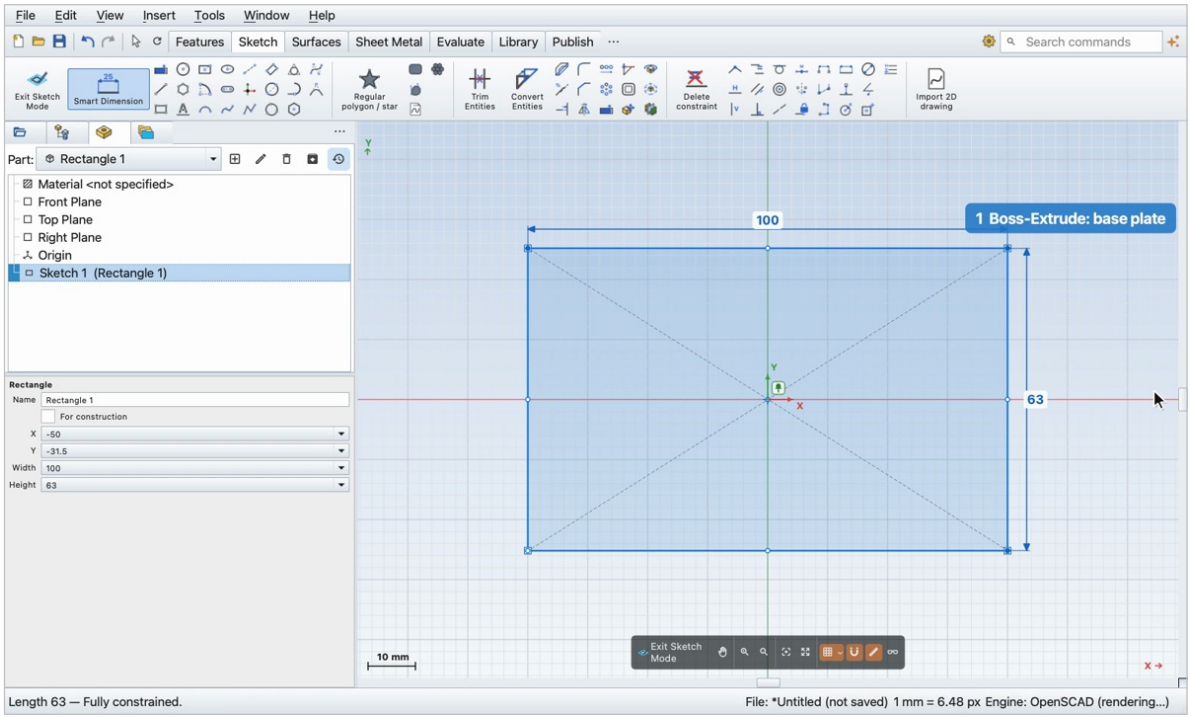

4. Features tab, Extruded Boss, click the rectangle, distance twelve, OK.

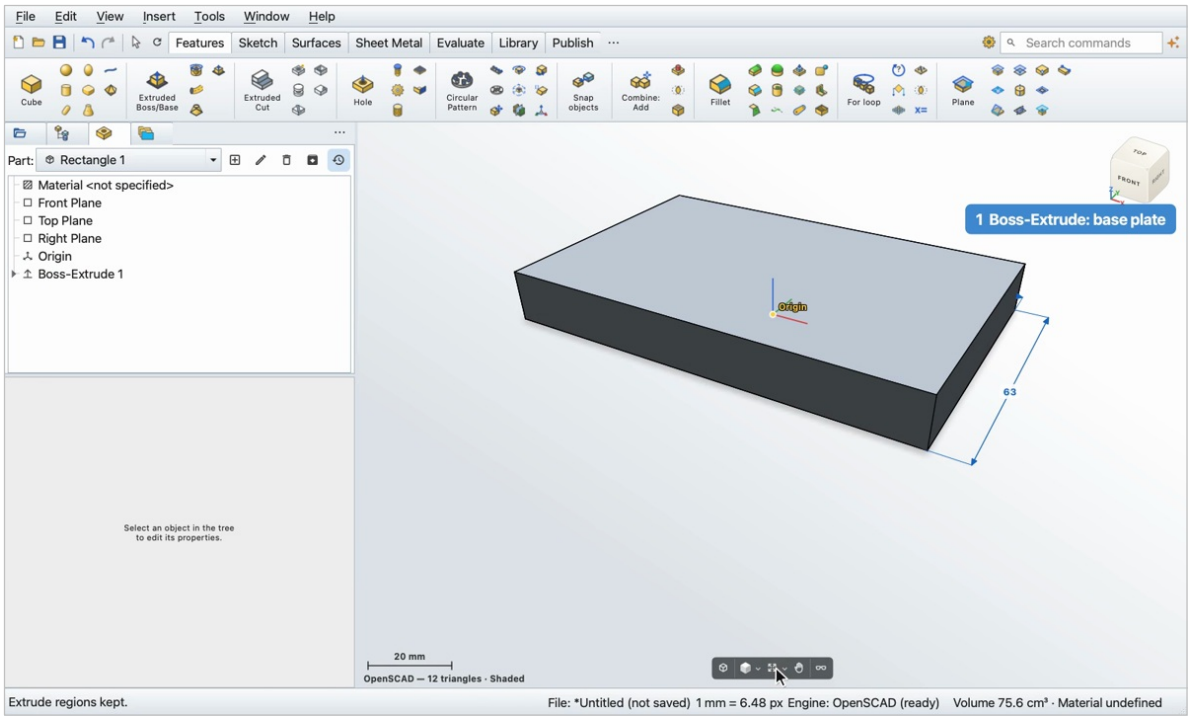

# Step 2

**The two front corners are rounded, radius twenty five.**

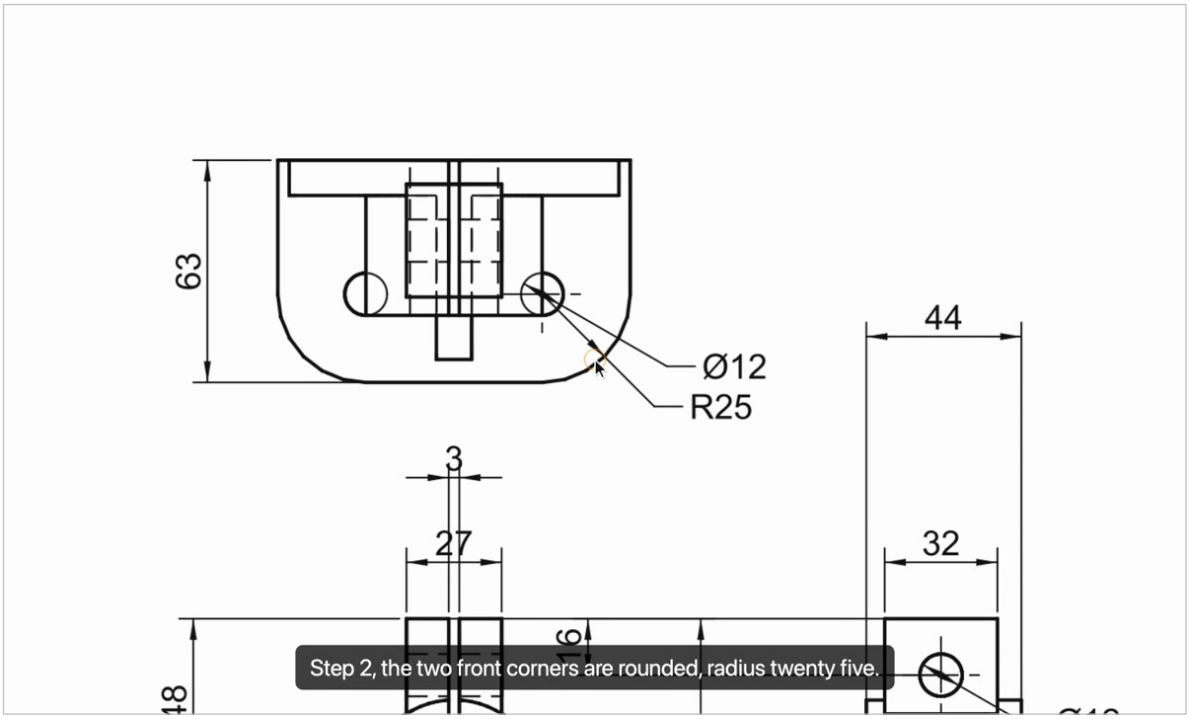


1. Click Fillet, then the two front corner edges.

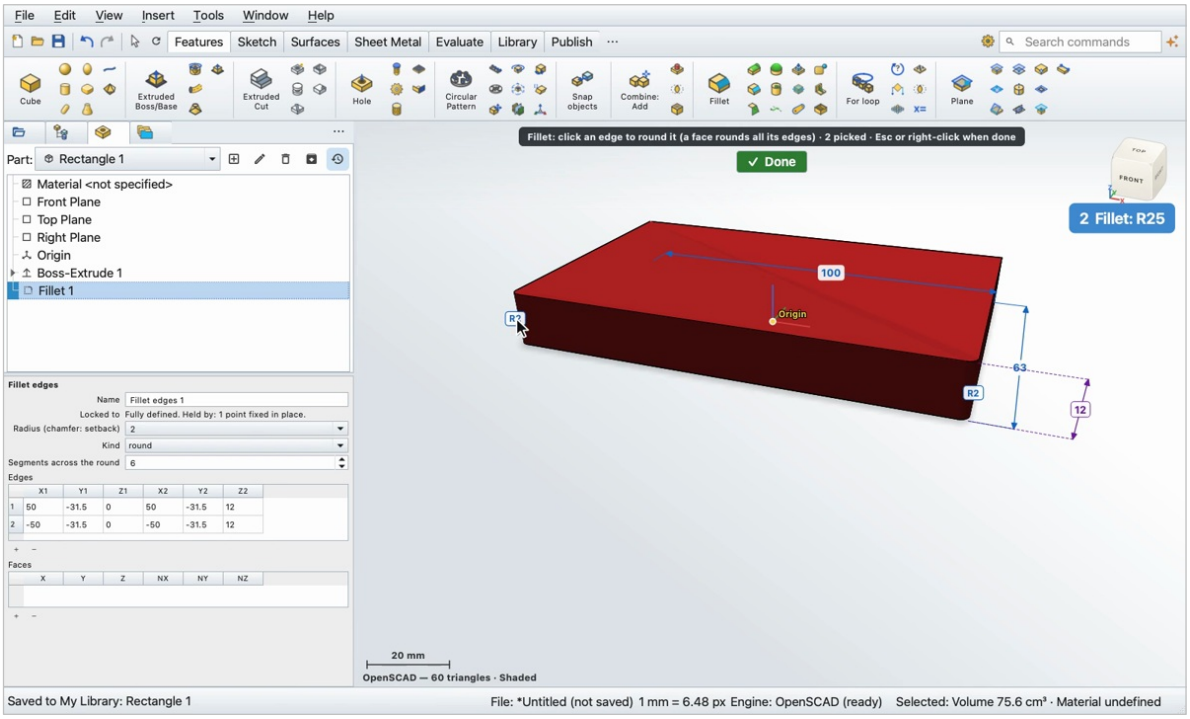

2. Radius twenty five, and press Escape.

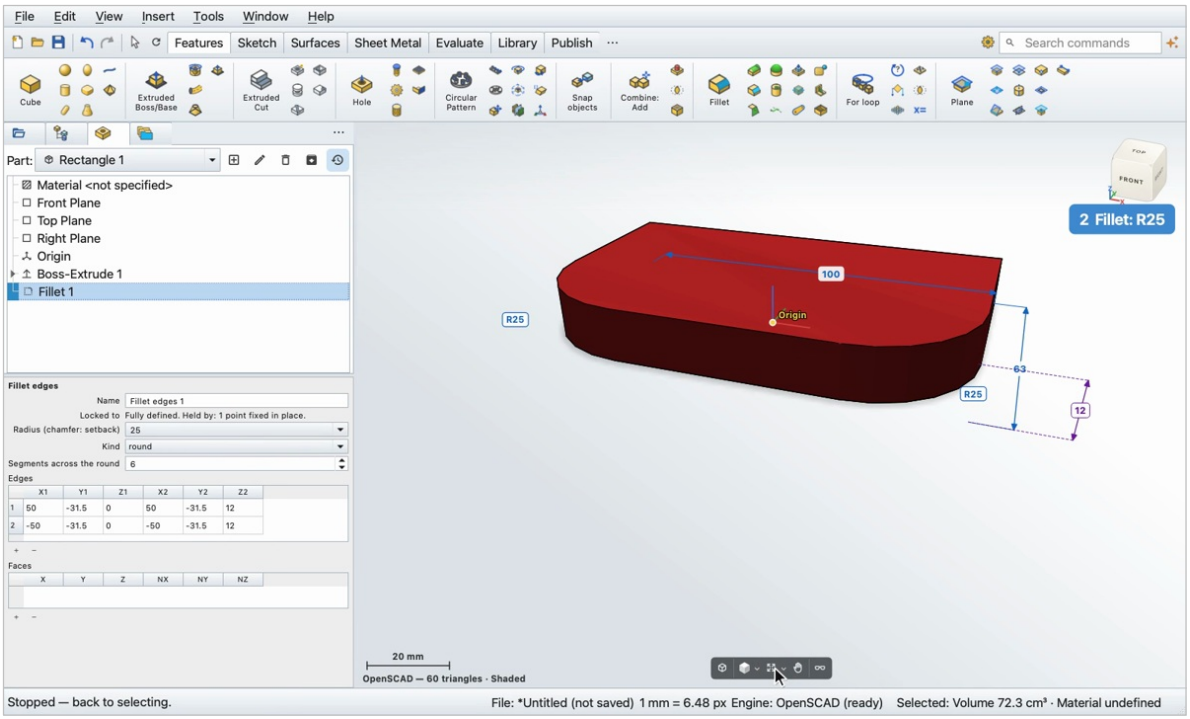

# Step 3

**Two holes twelve across, at the centres of the rounds.**

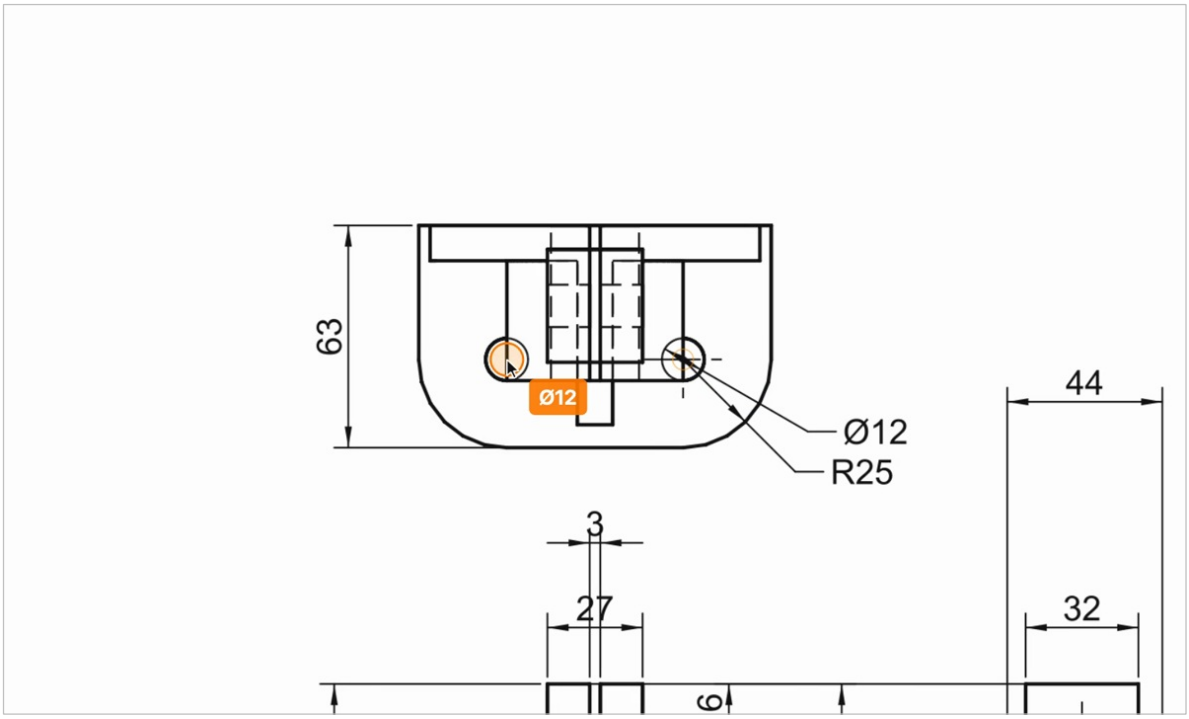


1. Sketch, and click the top face of the plate.

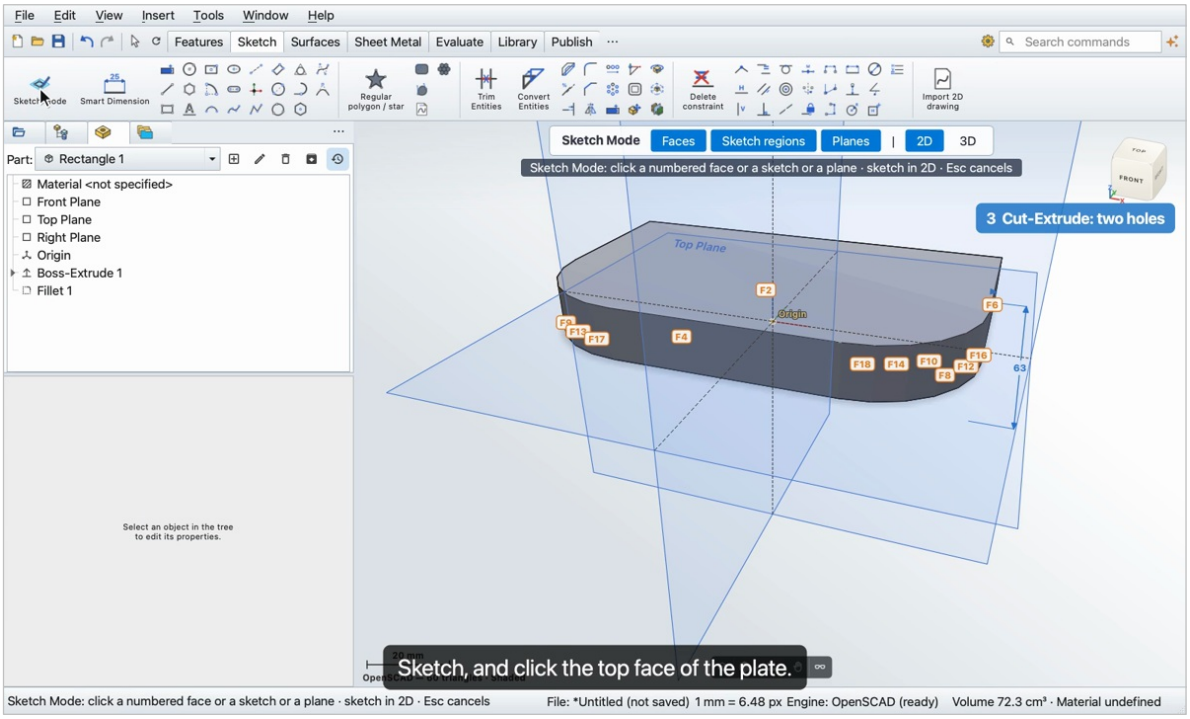

2. Sketch regions off, so the click takes the face.

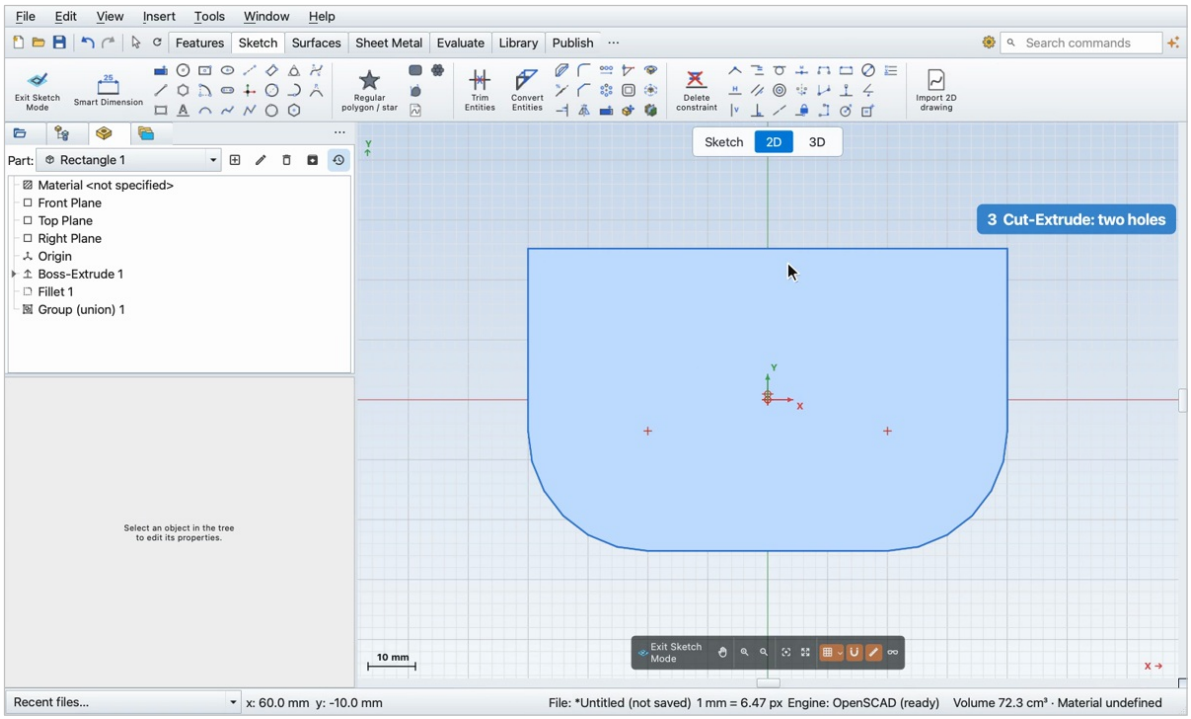


3. Two circles, each centred on a round's centre.

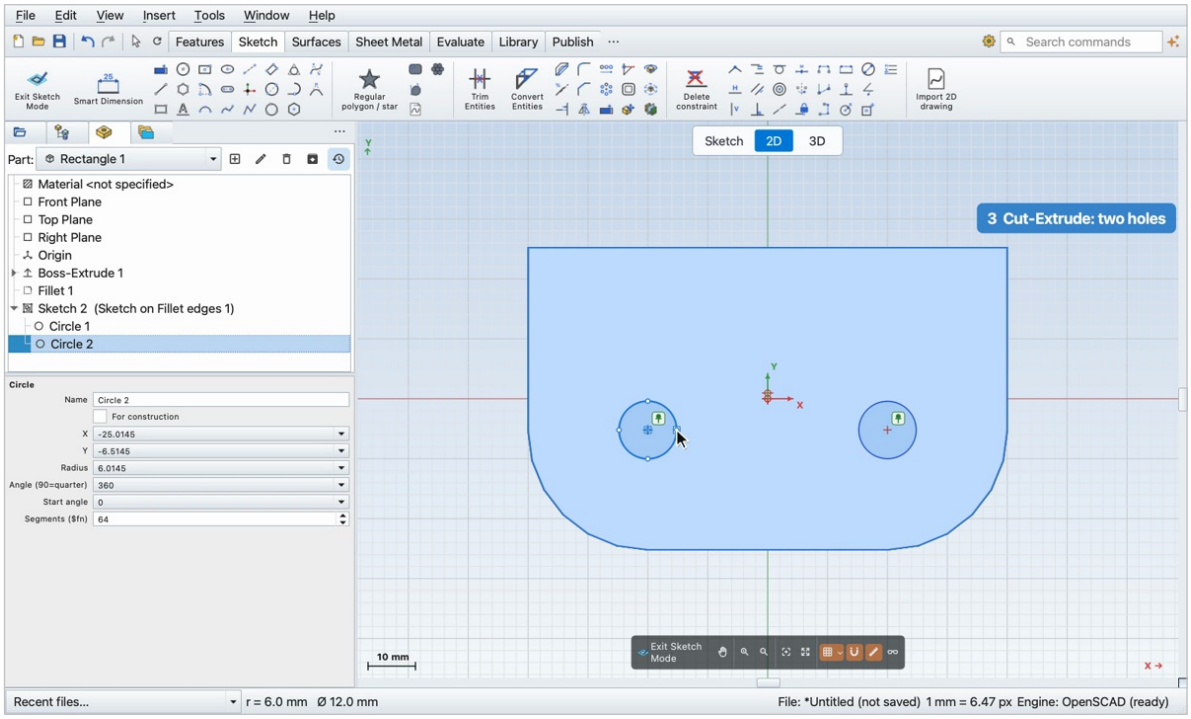

4. Smart Dimension both: twelve.

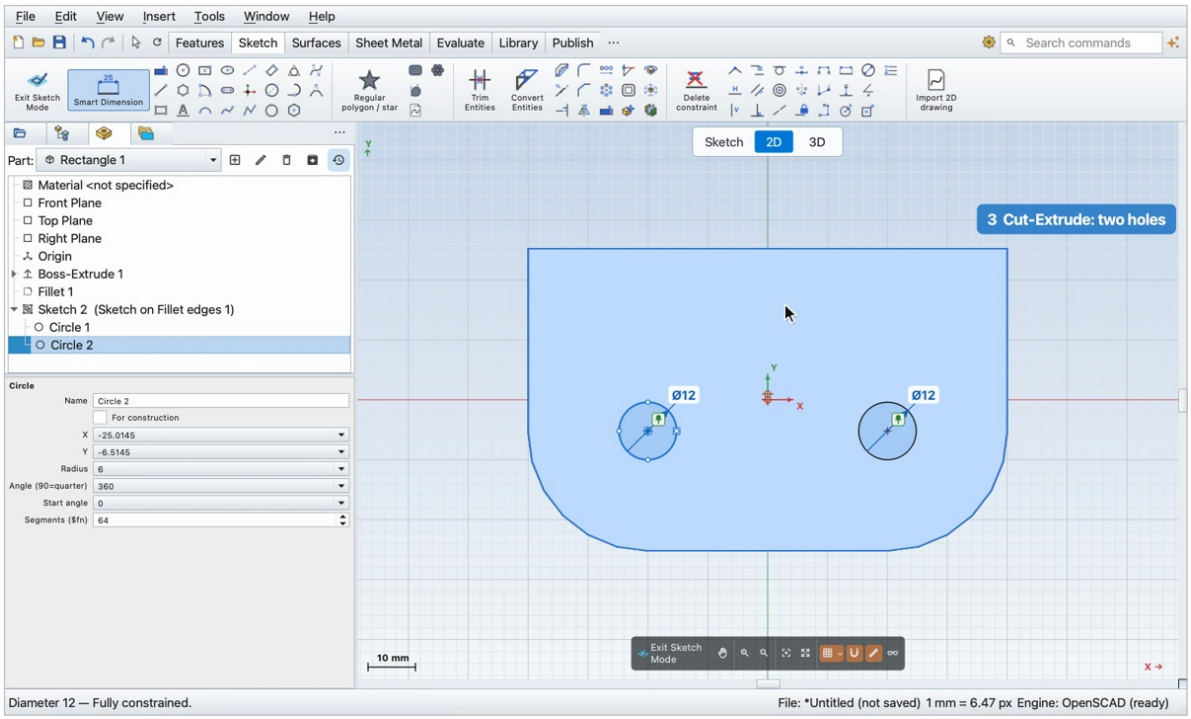


5. Features, Extruded Cut, click inside both circles, Through All, OK.

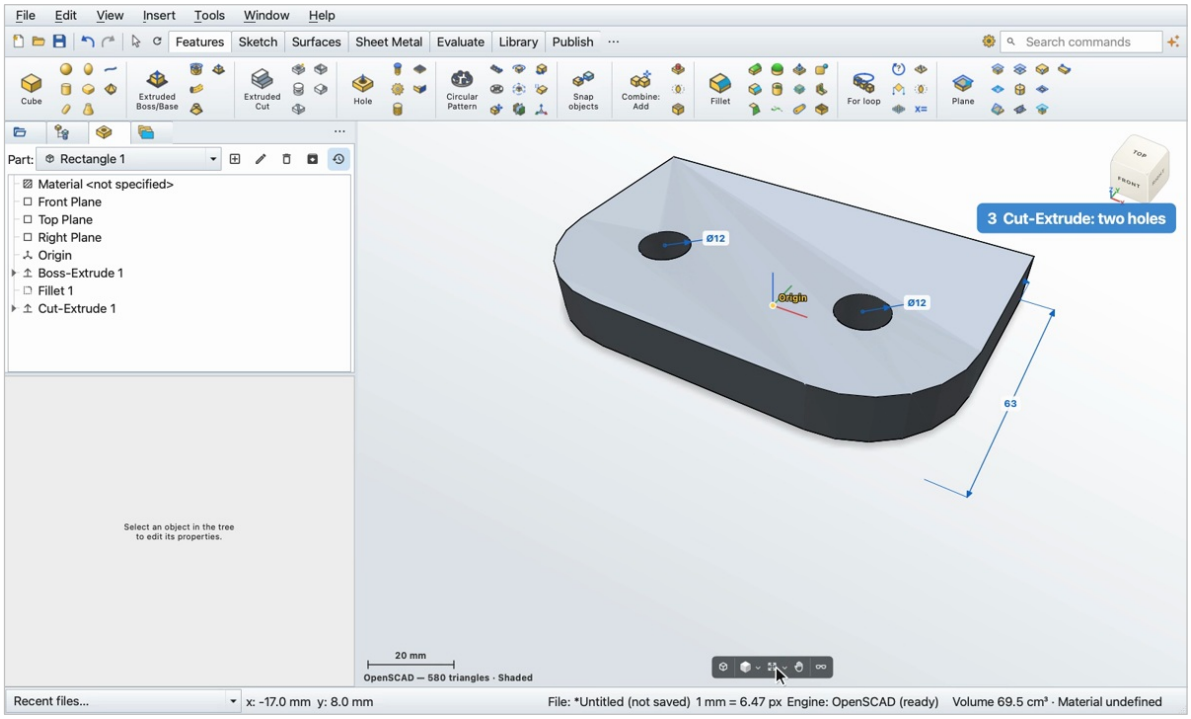

# Step 4

**The upright, ten thick at the back. A circle fifty across, ninety above the bottom, and two lines from the ends of the base touching it.**

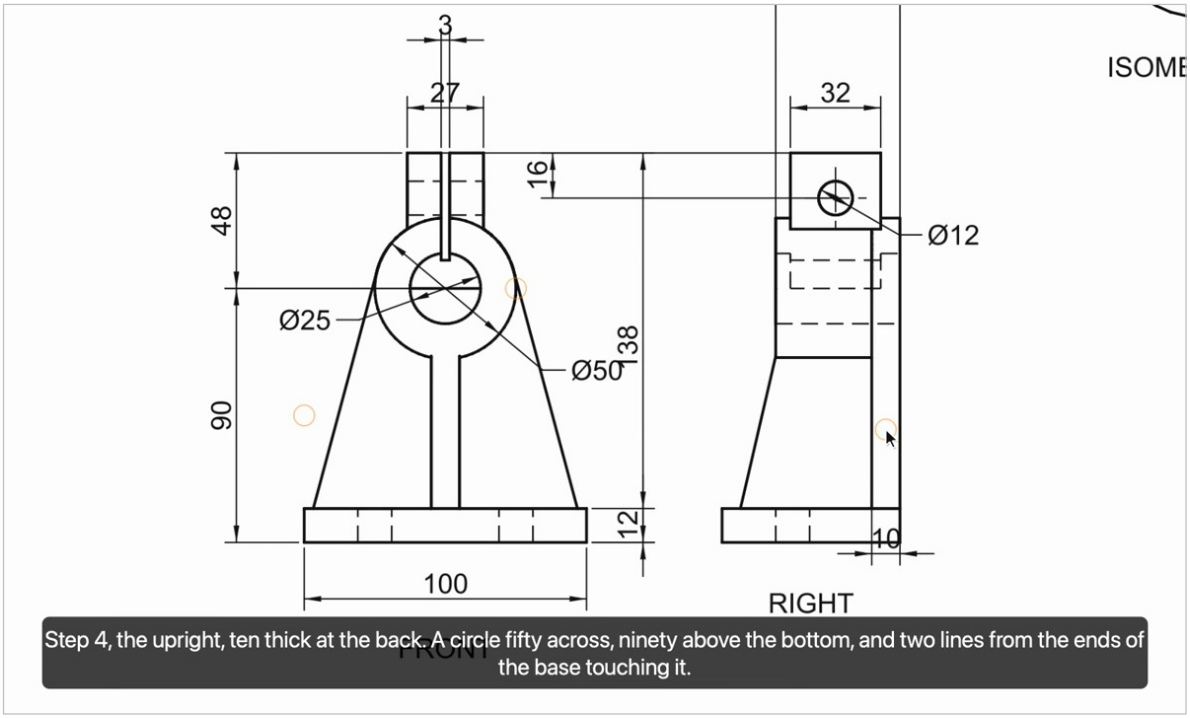


1. Turn to the back, Sketch, and click the back face of the plate.

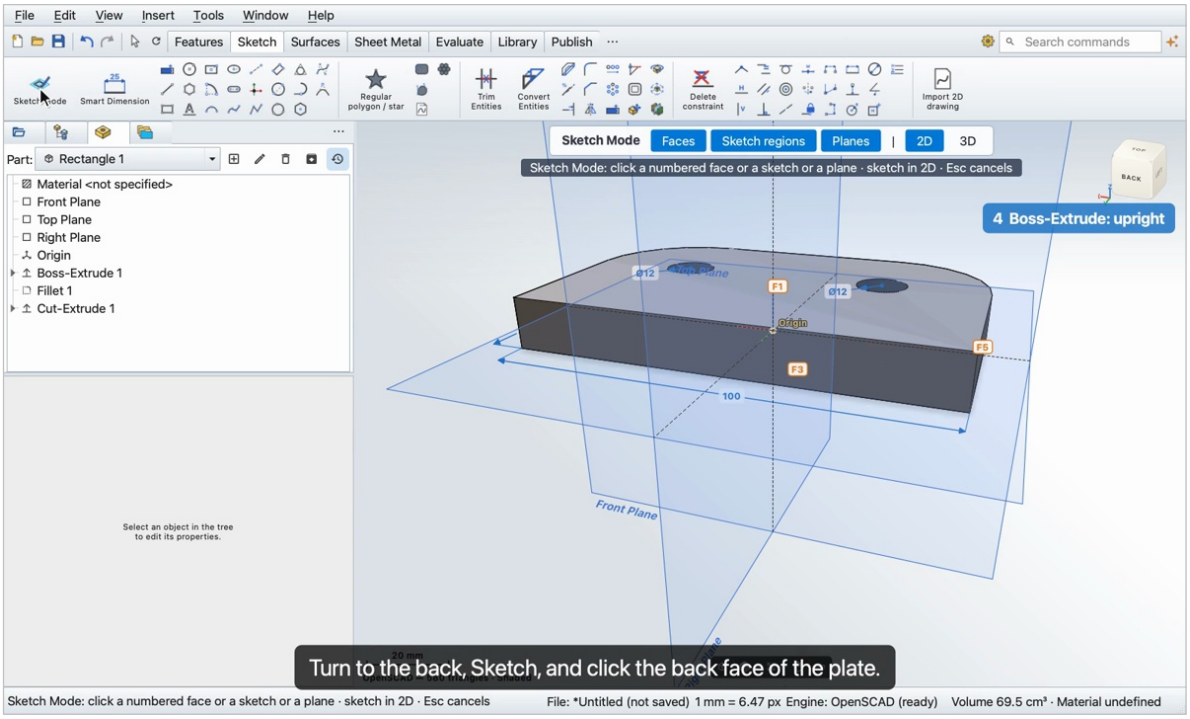

2. Sketch regions off, so the click takes the face.

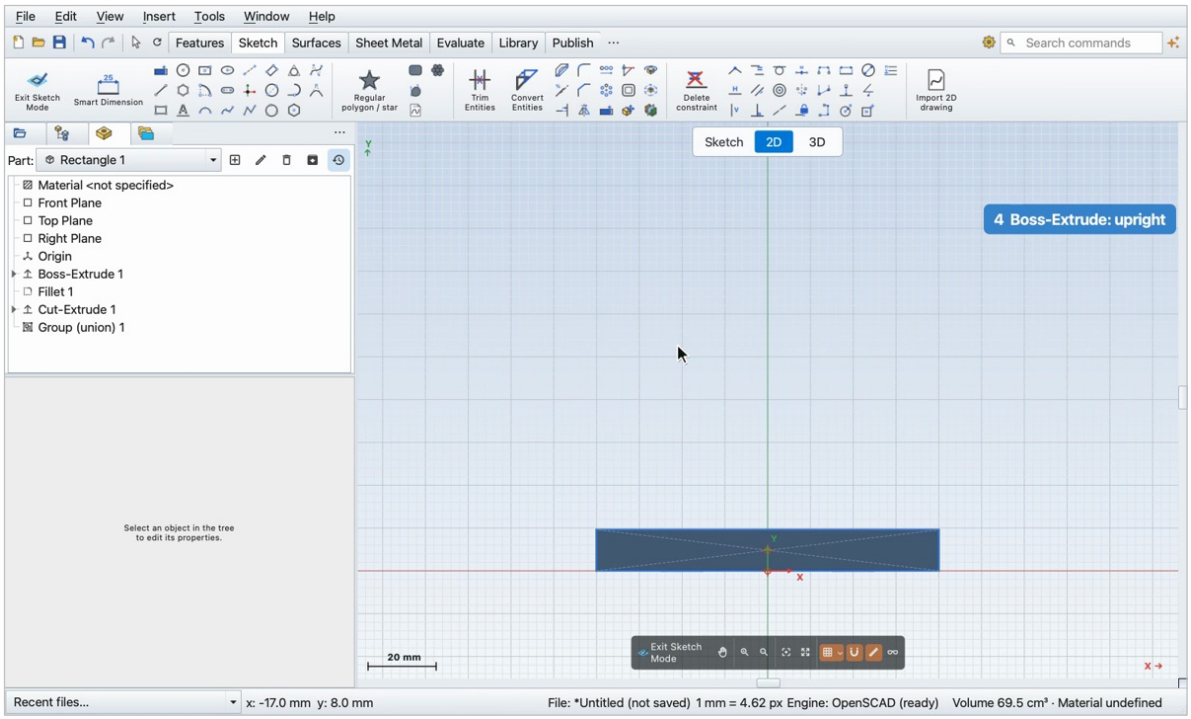


3. A circle ninety above the origin, Smart Dimension fifty.

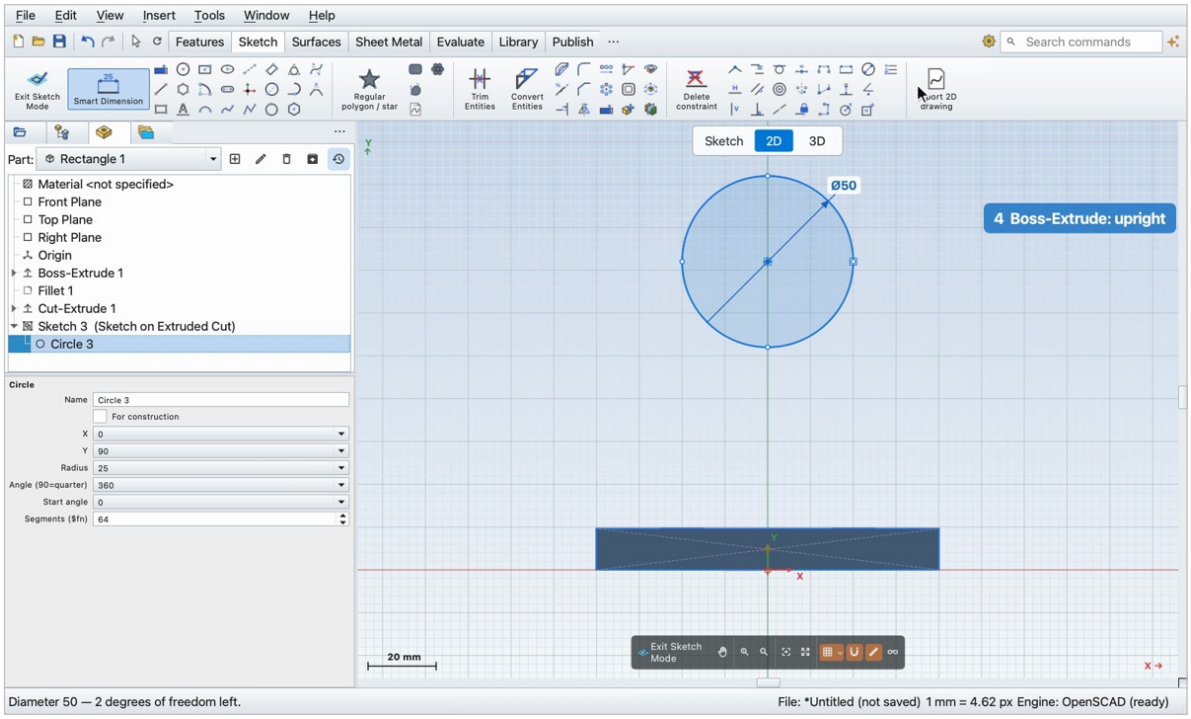

4. Line tool: from each end of the base up to touch the circle, and one along the bottom.

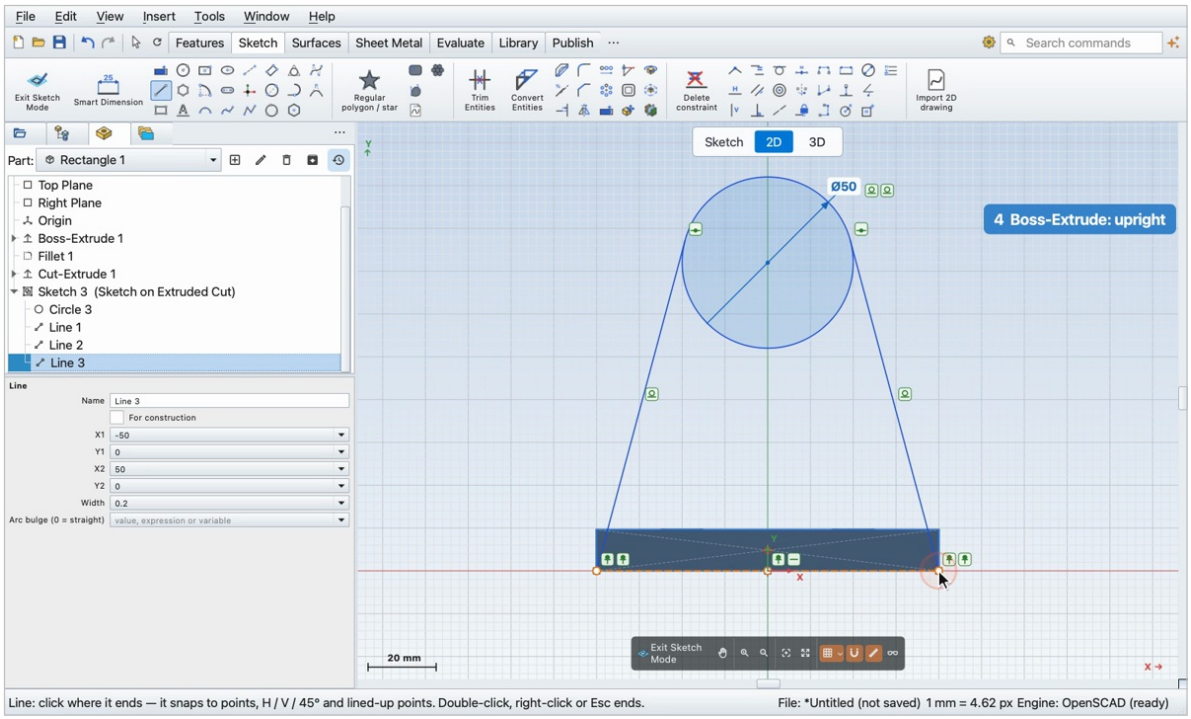


5. Extruded Boss: click the trapezoid and the circle. Distance ten, Reverse, OK.

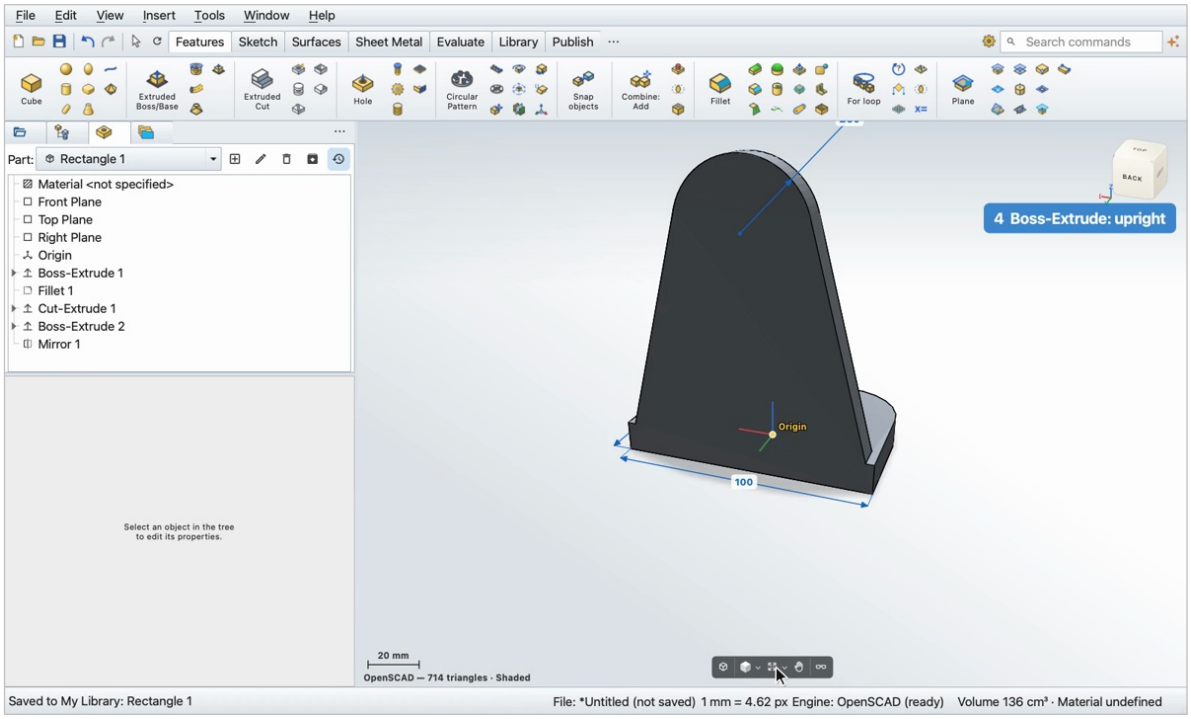

# Step 5

**The boss: fifty across, forty four long from the back.**

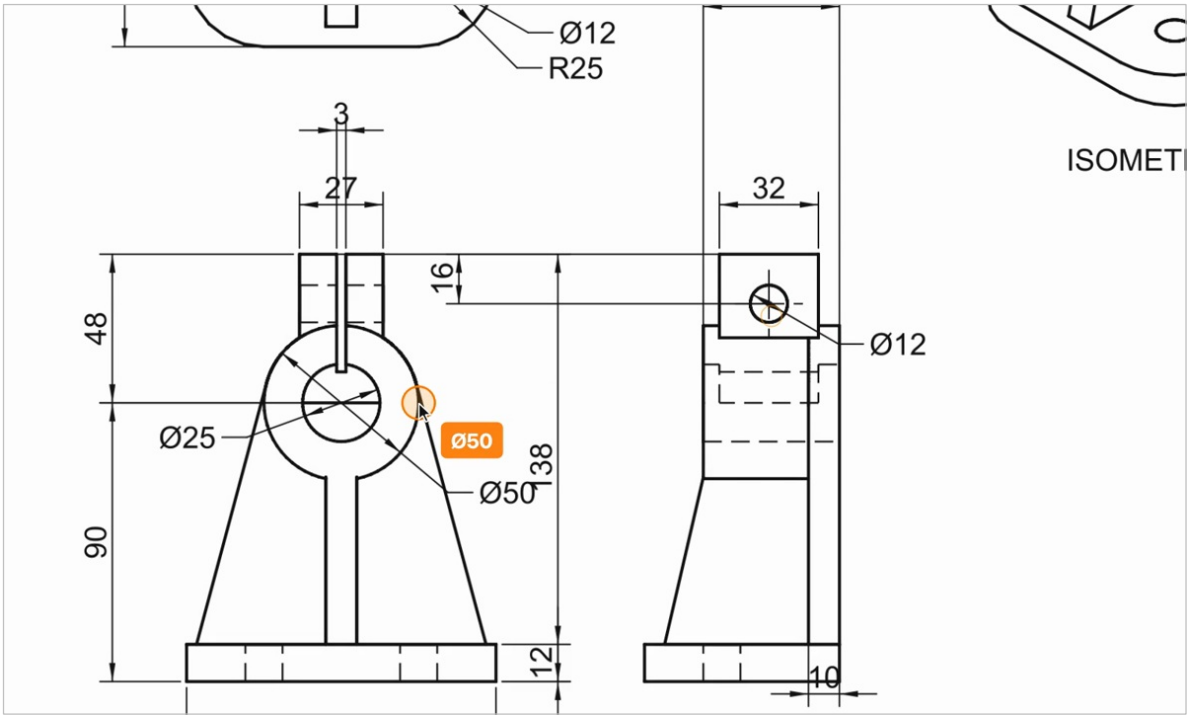


1. Back to the front, Sketch on the front face of the upright, a circle fifty across.

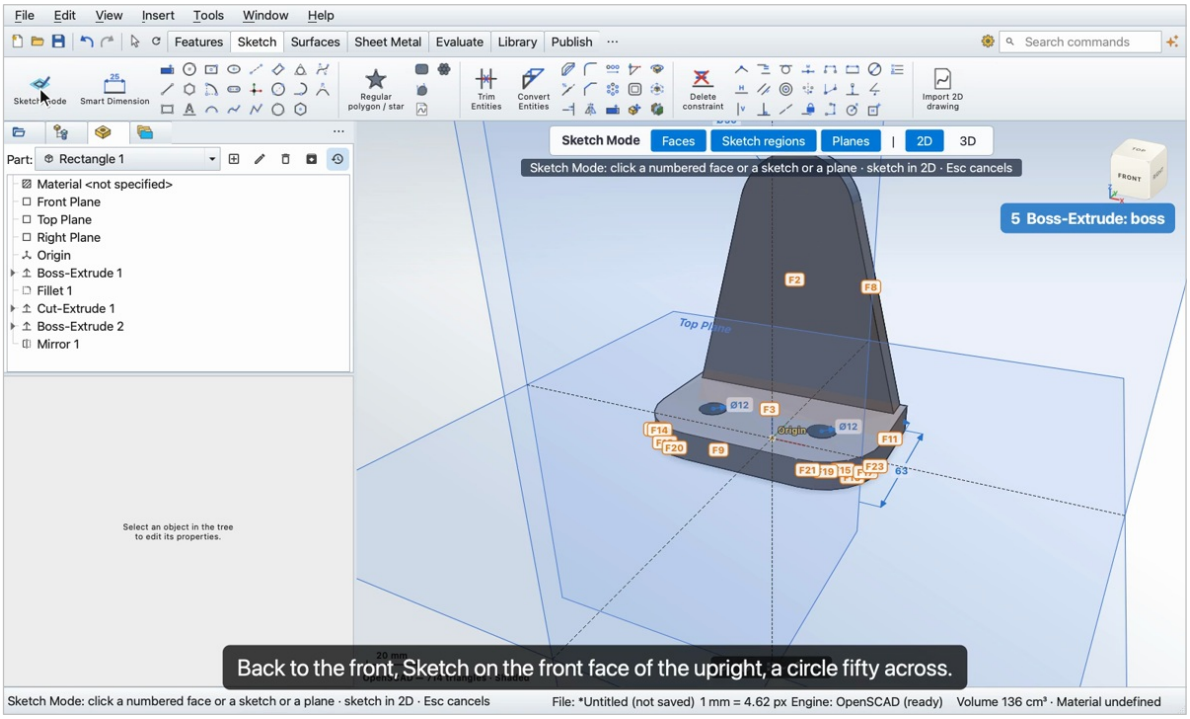

2. Sketch regions off, so the click takes the face.

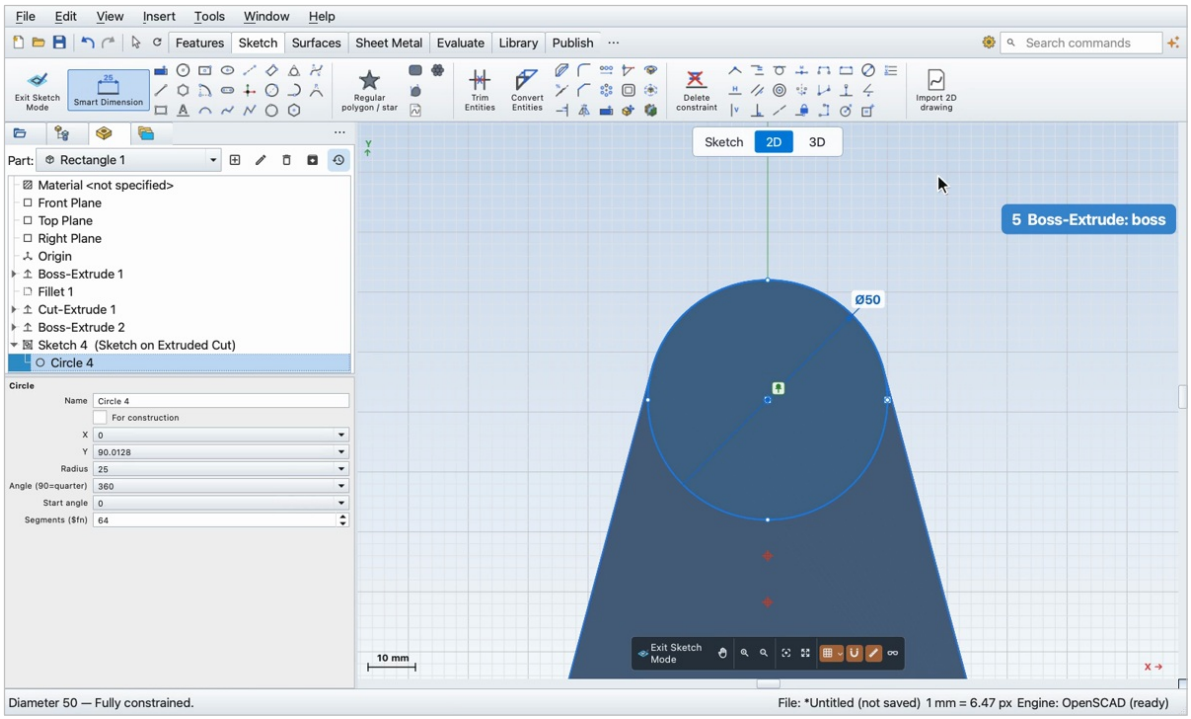


3. Extruded Boss: the circle, thirty four, so forty four with the upright. OK.

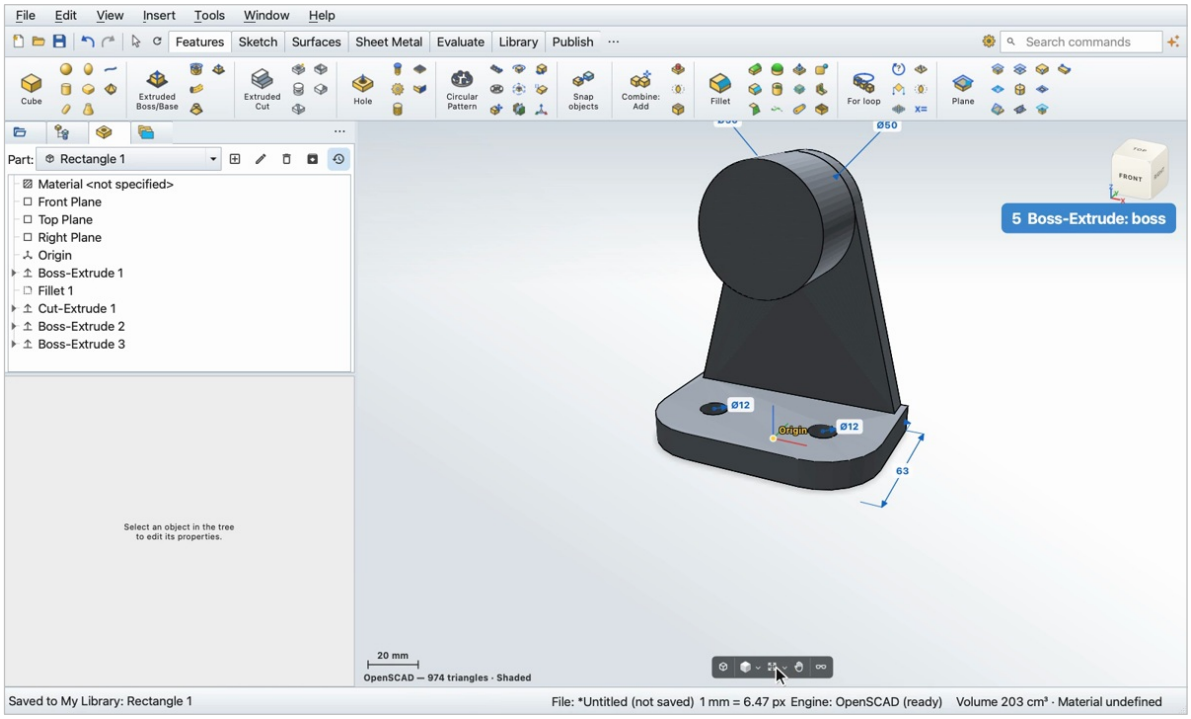

# Step 6

**The bore: twenty five across, right through.**

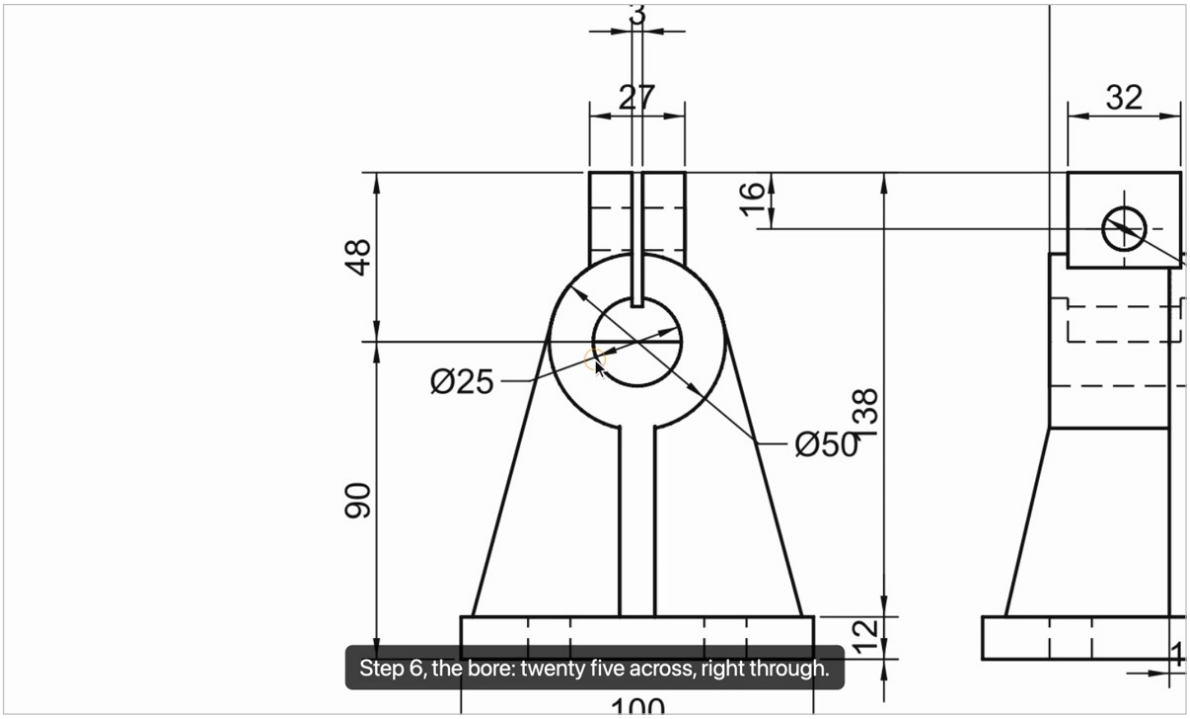


1. Sketch on the front of the boss, a circle twenty five across.

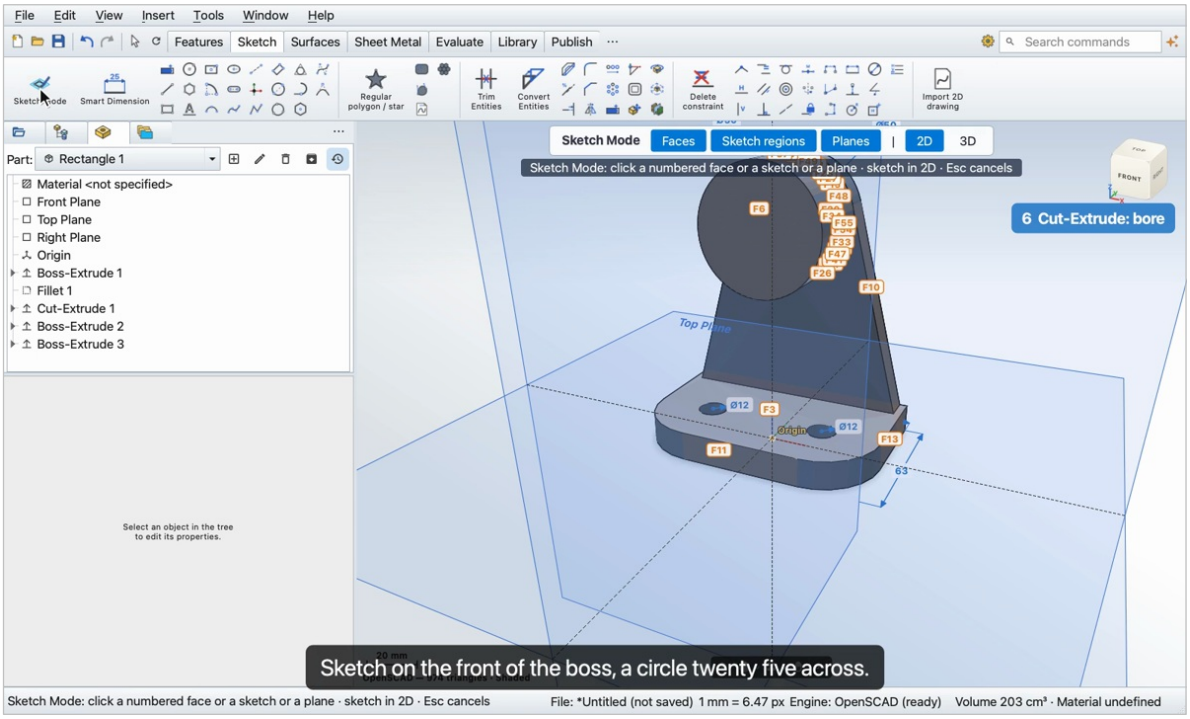

2. Sketch regions off, so the click takes the face.

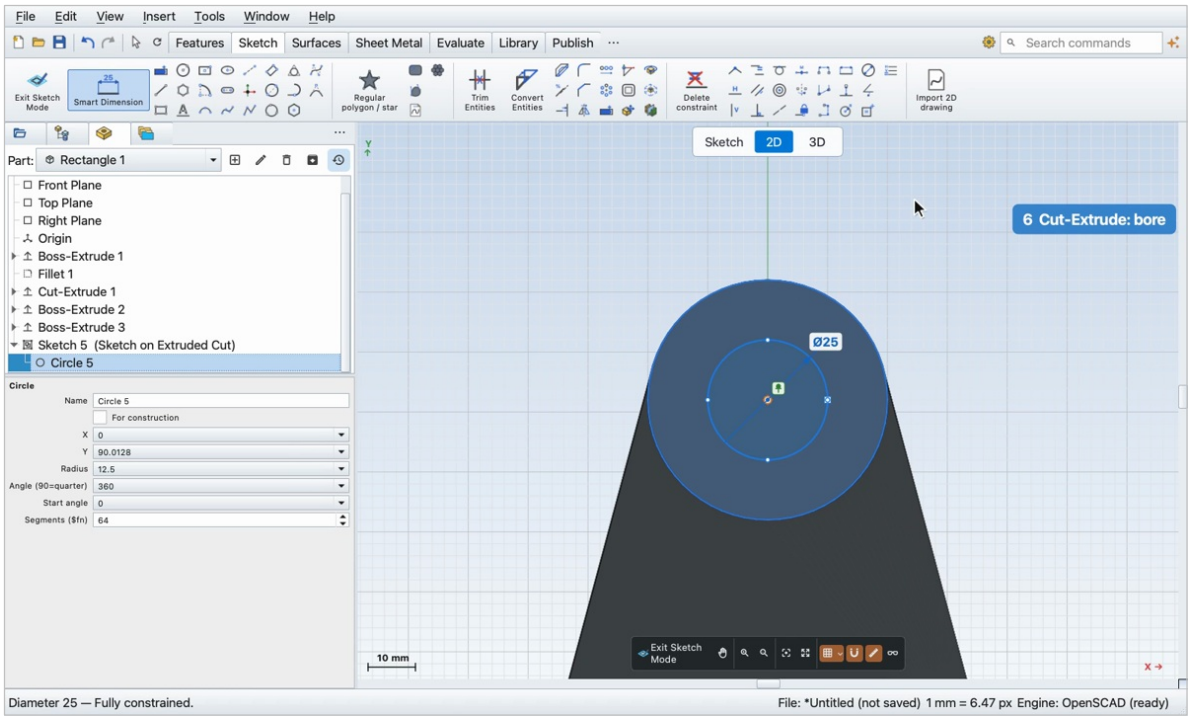


3. Extruded Cut: the circle, Through All, OK.

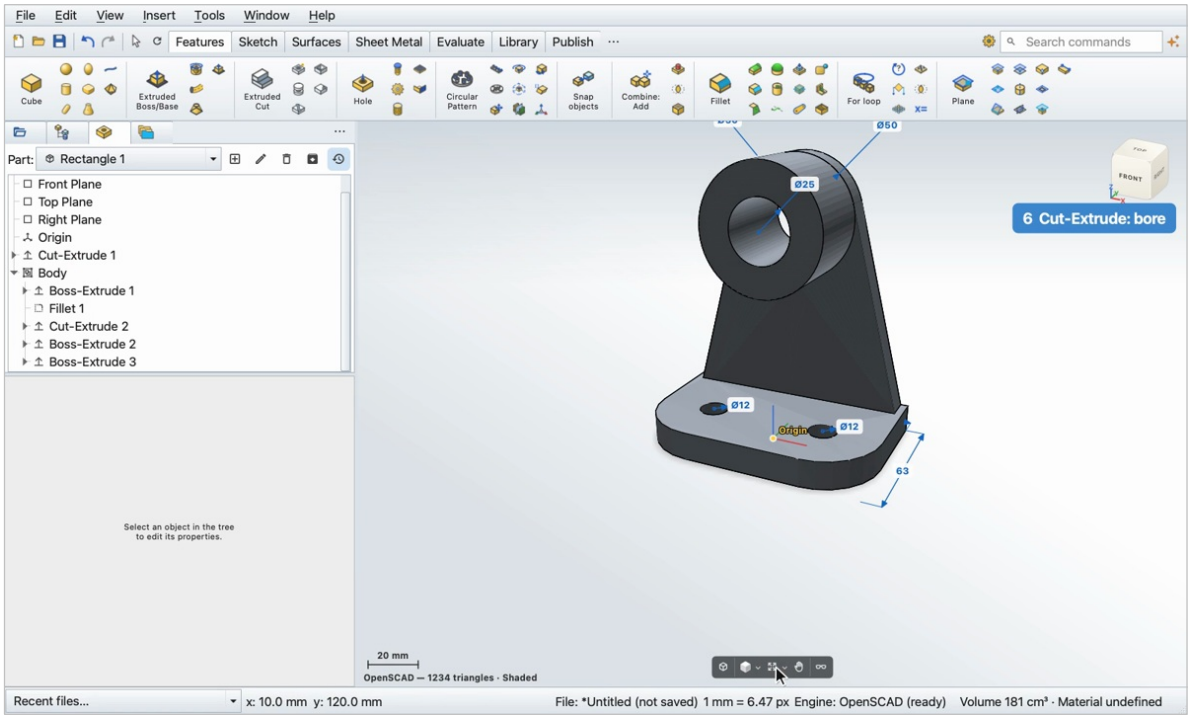

# Step 7

**The clamping block. Its top is forty eight above the boss centre, one hundred and thirty eight from the bottom; twenty seven wide, thirty two long.**

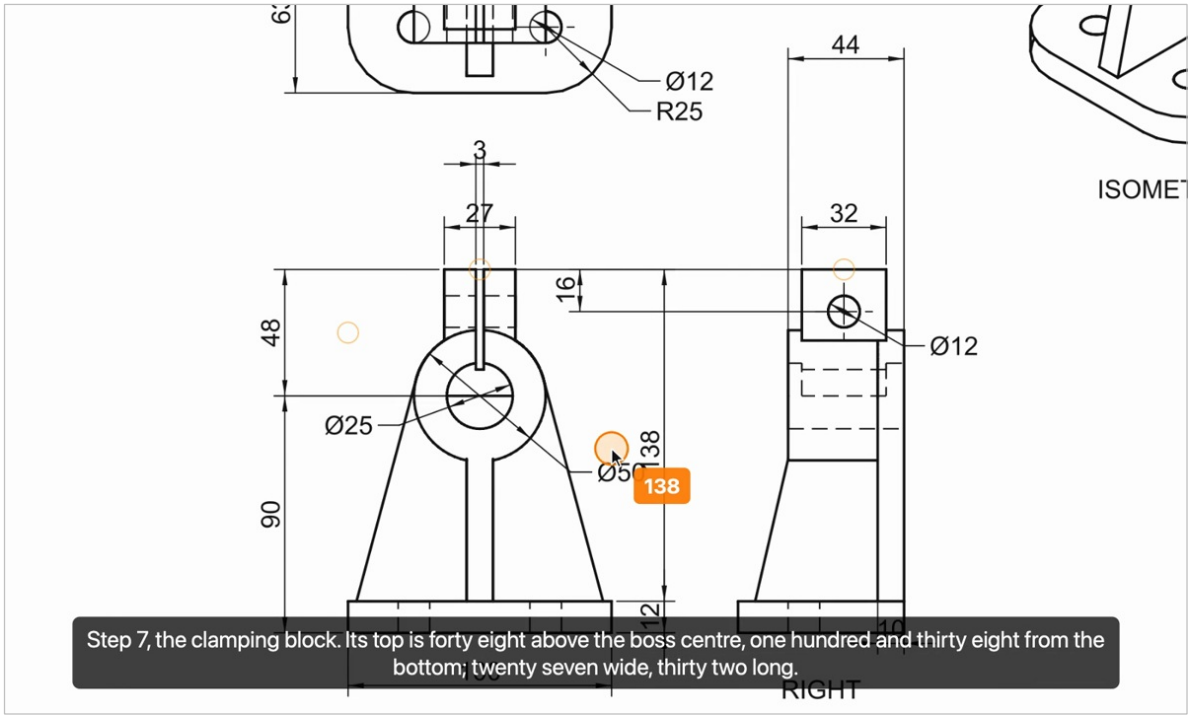


1. Features tab, Plane. Click the Top Plane in the tree, distance one hundred and thirty eight, OK.

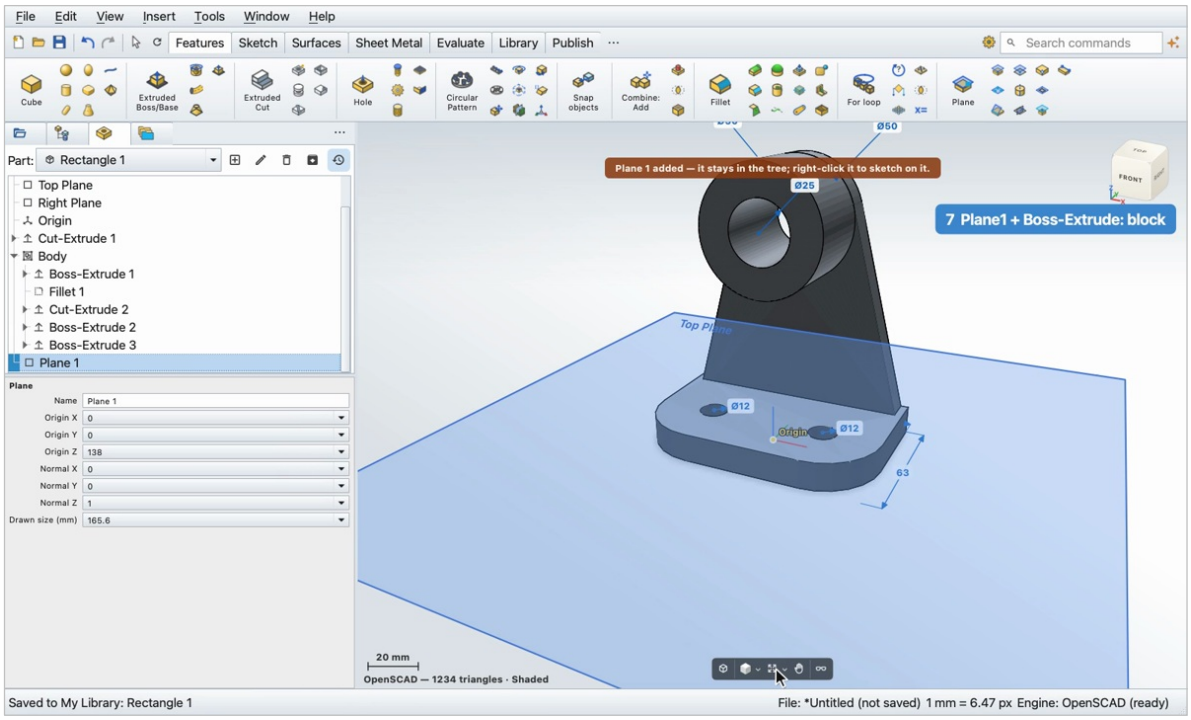

2. Click Plane1 in the tree, then Sketch: a rectangle twenty seven by thirty two.

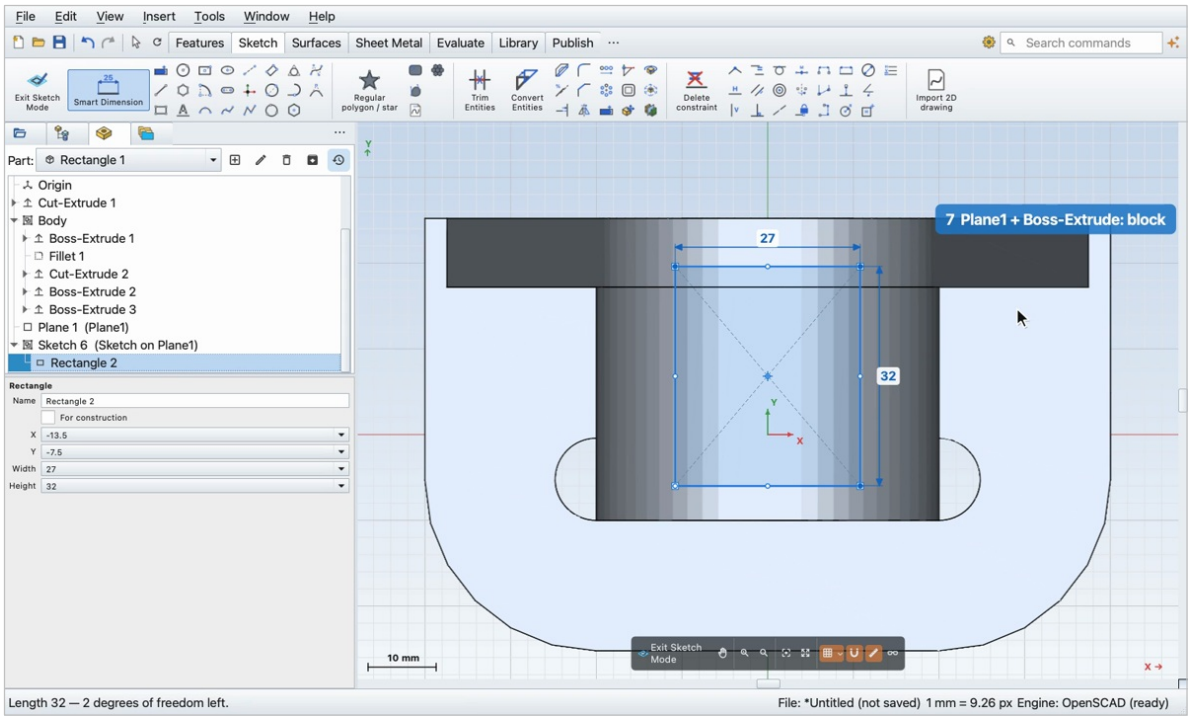


3. Extruded Boss: the rectangle, forty eight, Reverse, so it runs down to the boss. OK.

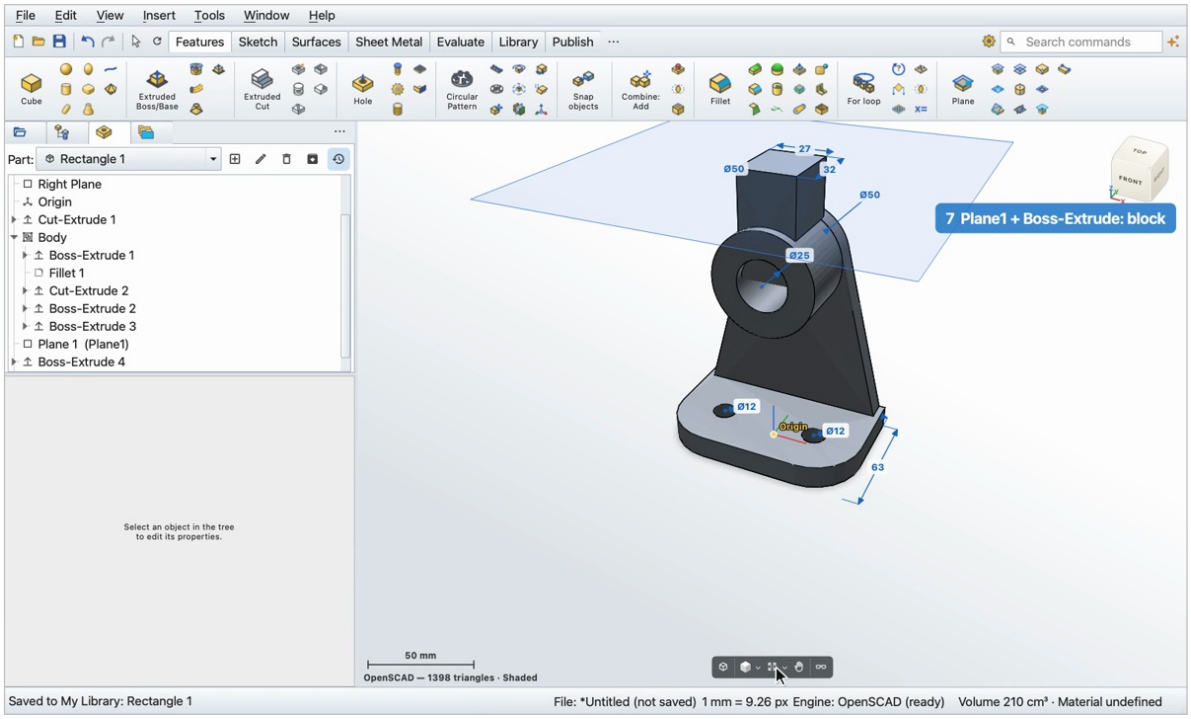

# Step 8

**The slot that splits the block: three wide, down into the bore.**

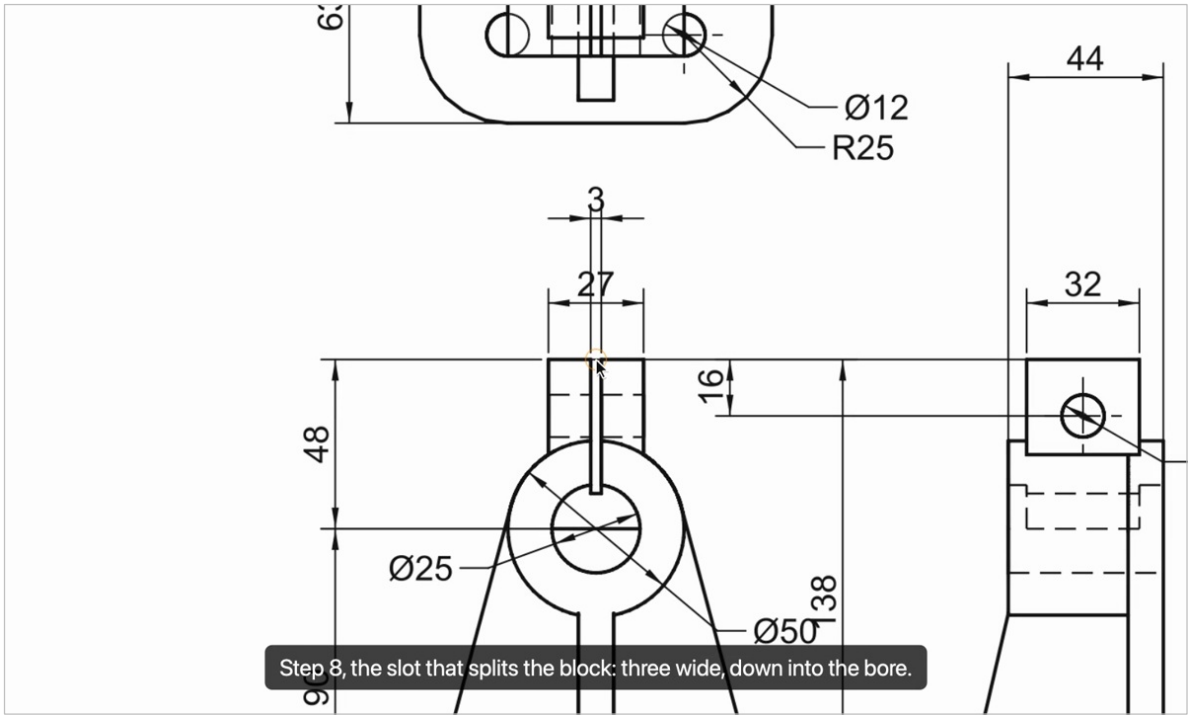


1. Sketch on the top of the block: a rectangle three wide, longer than the block.

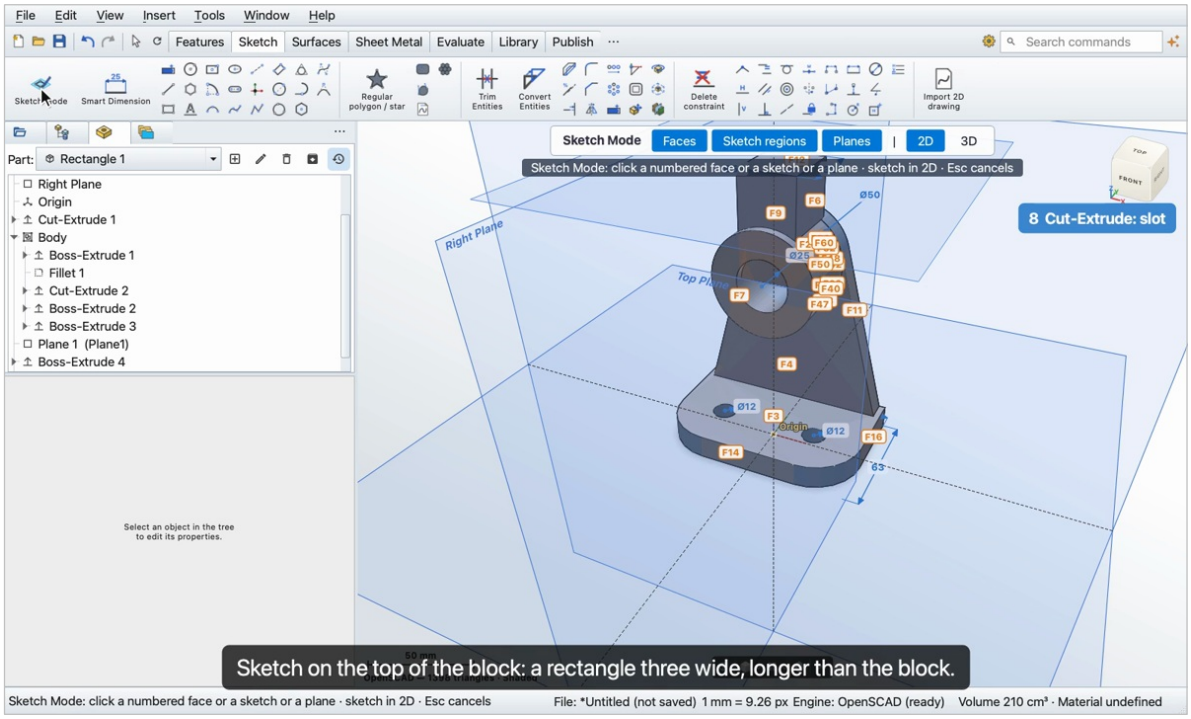

2. Sketch regions off, so the click takes the face.

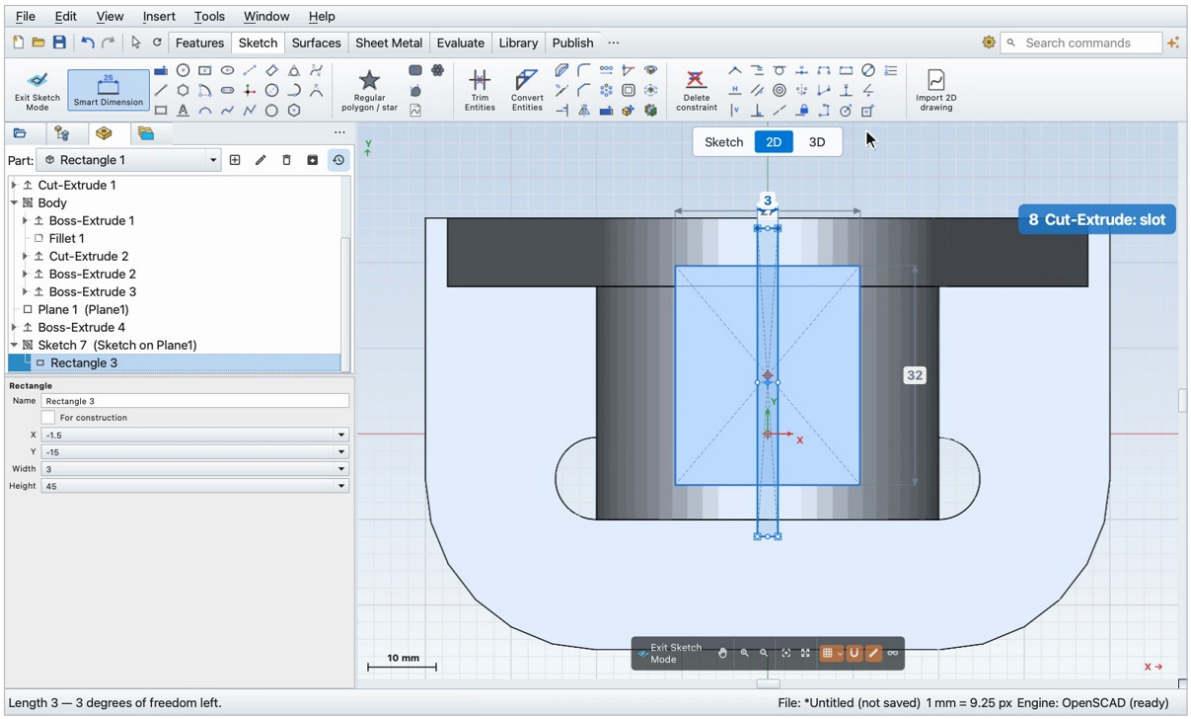


3. Extruded Cut: click the slot inside the block, forty eight deep, OK.

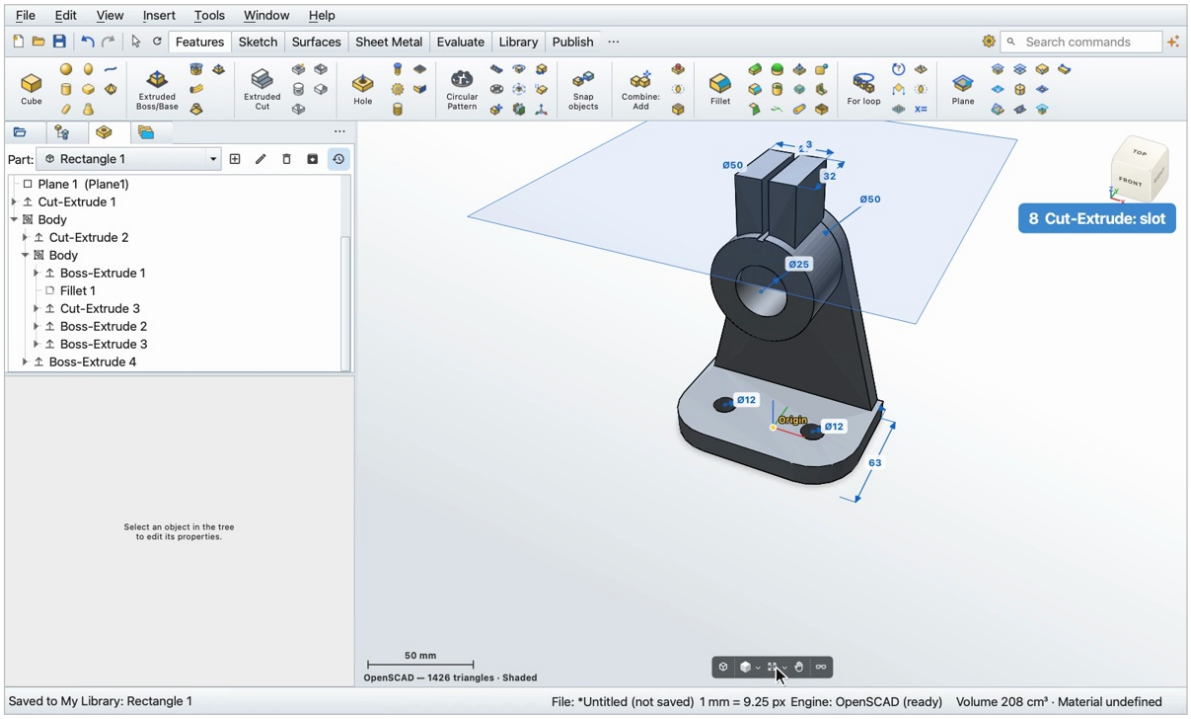

# Step 9

**The clamping bolt hole: twelve across, sixteen below the top, right across.**

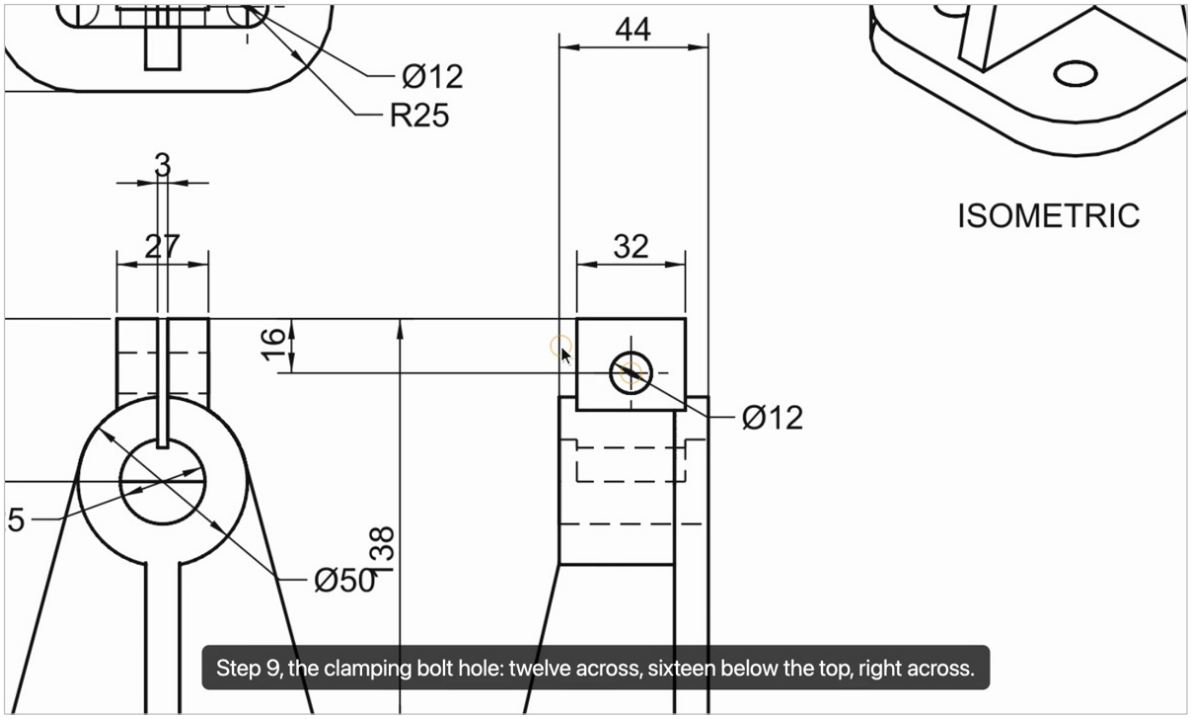


1. Sketch on the side of the block, a circle twelve across, sixteen below the top.

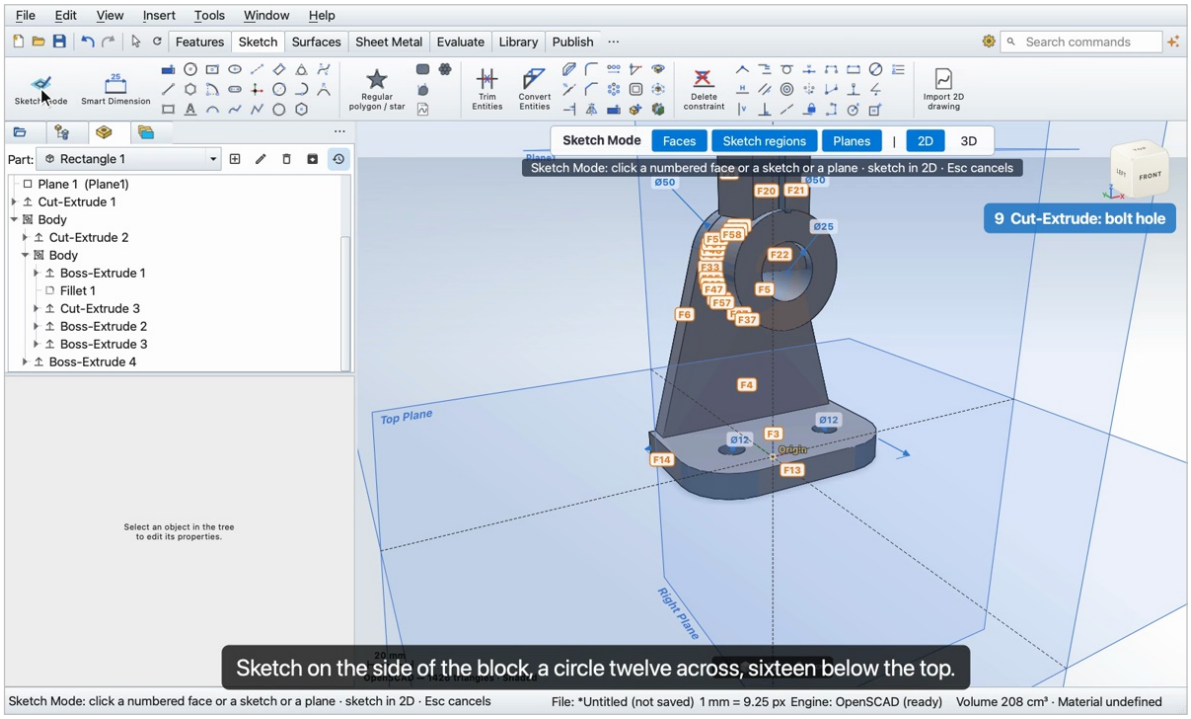

2. Sketch regions off, so the click takes the face.

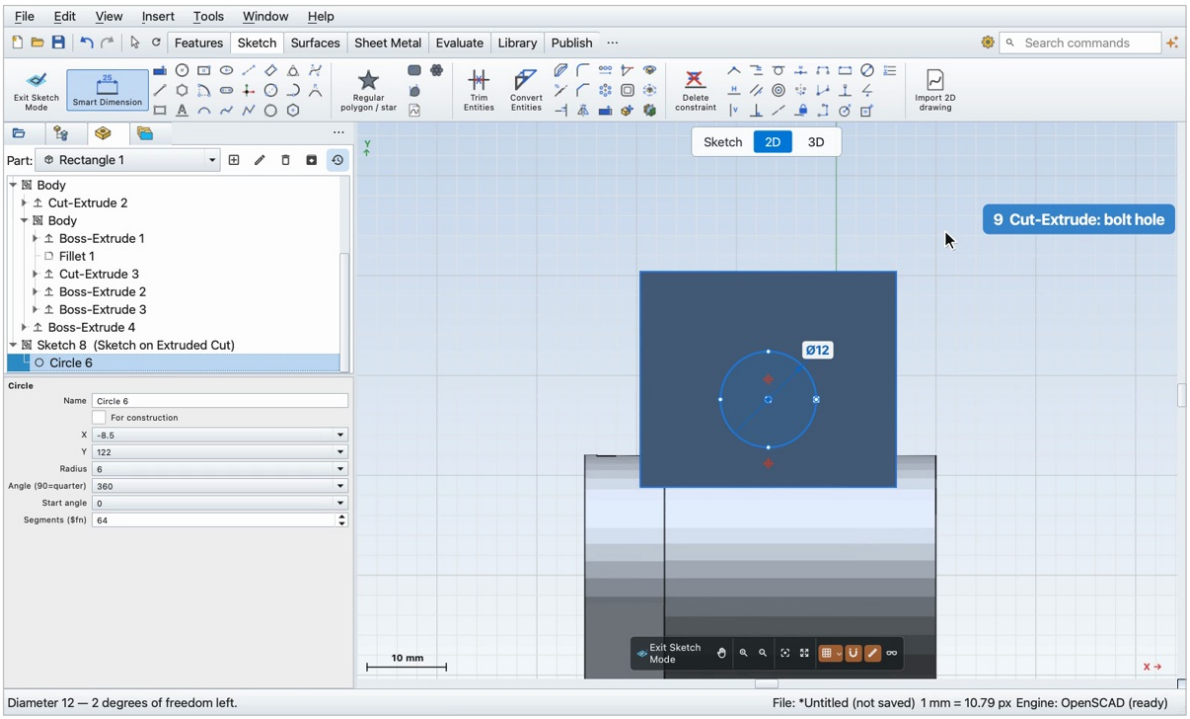


3. Extruded Cut: the circle, Through All, OK.

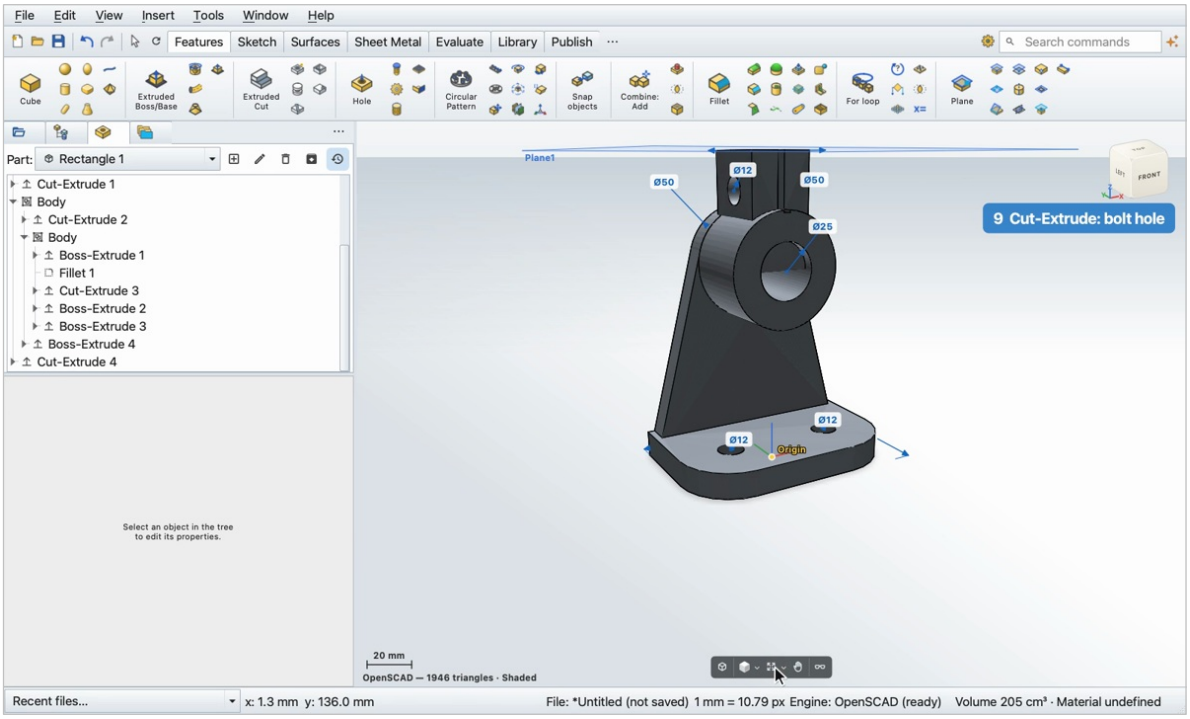

# Step 10

**The rib under the boss, ten thick on the middle plane, from the boss down to the front of the base.**

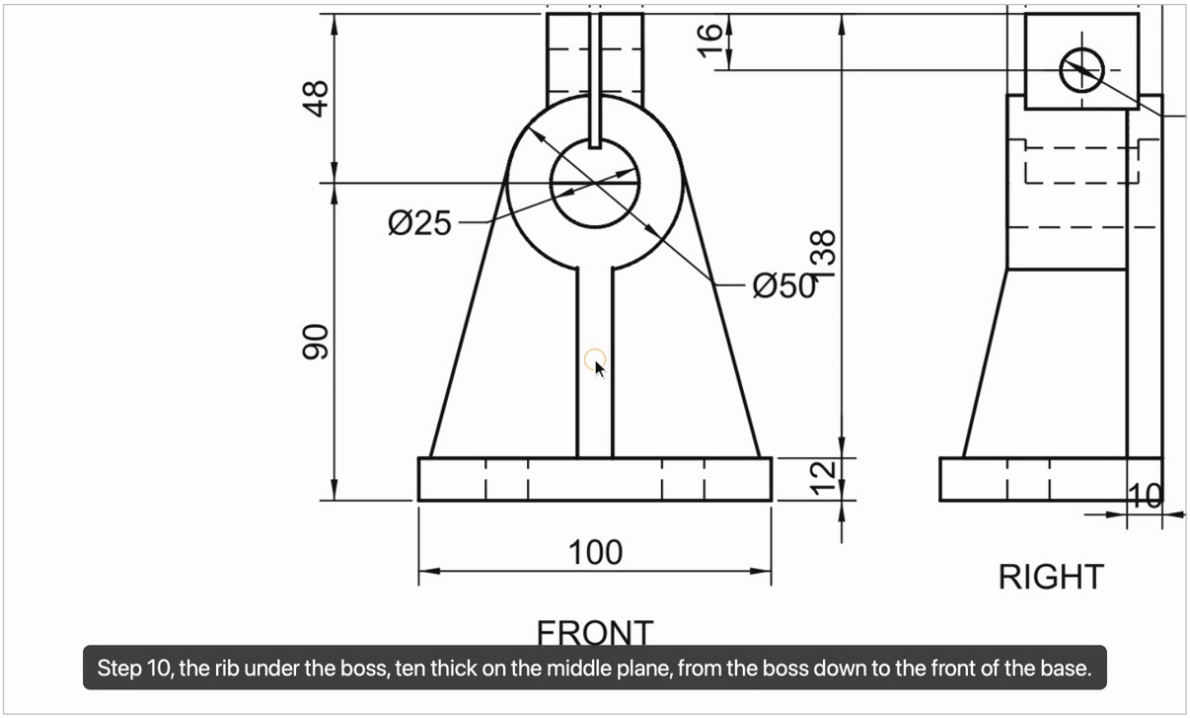


1. Click the Right Plane, Sketch, and four lines round the rib's side.

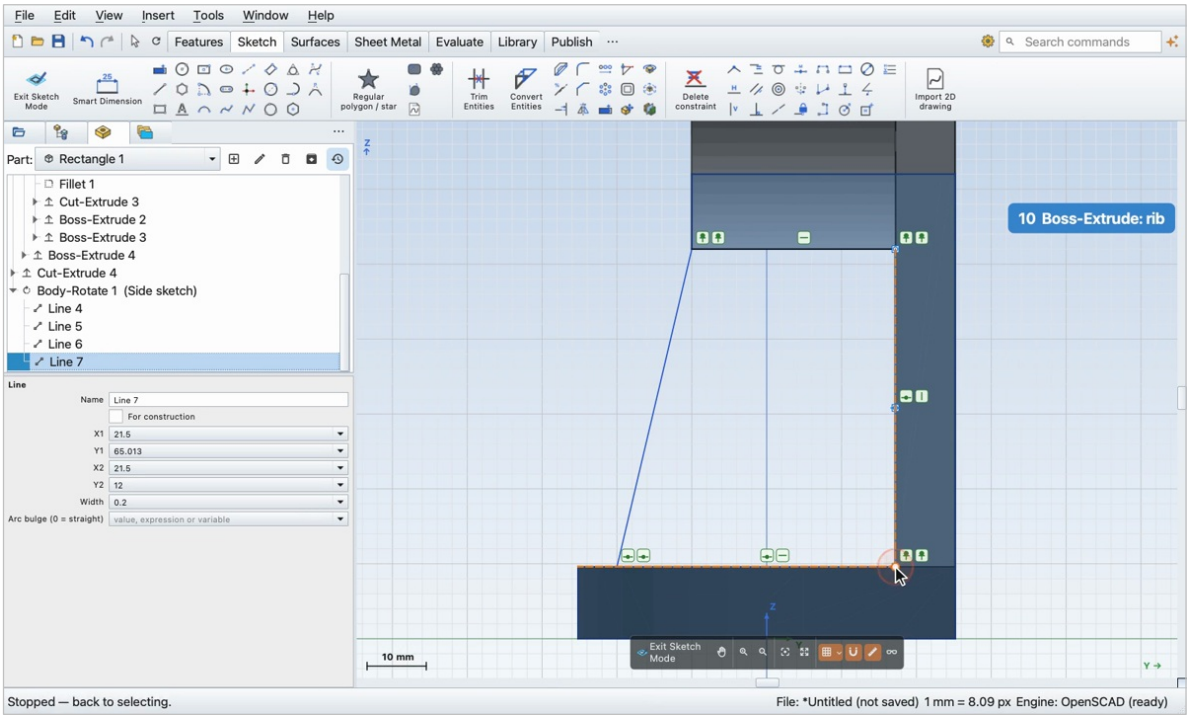

2. Extruded Boss: click the rib's area, Mid Plane, ten, OK.

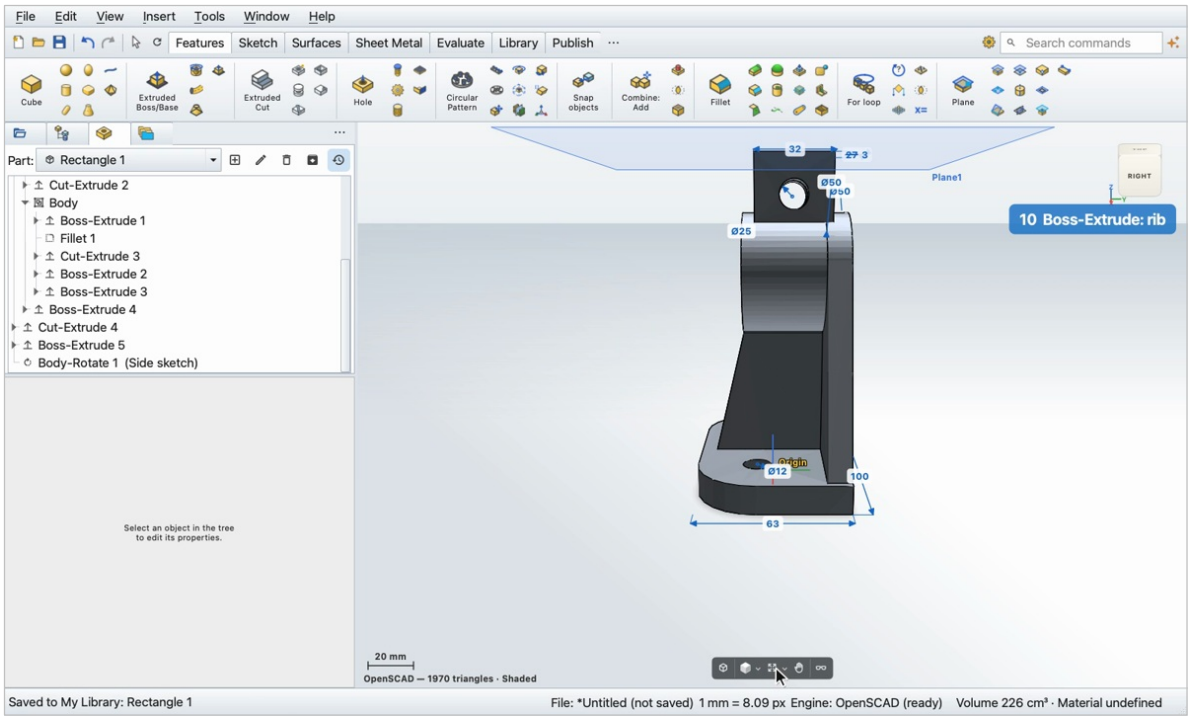


3. The bearing bracket is done: one hundred by sixty three, one hundred and thirty eight high.

