Fork clevis

Built in KherveCAD with the mouse, step by step, as in the video youtube.com/watch?v=MSFvK_kGt2Y. Each numbered line is one action; its picture shows the screen once it is done (the button used is outlined, the pointer shows where to click).

The drawing

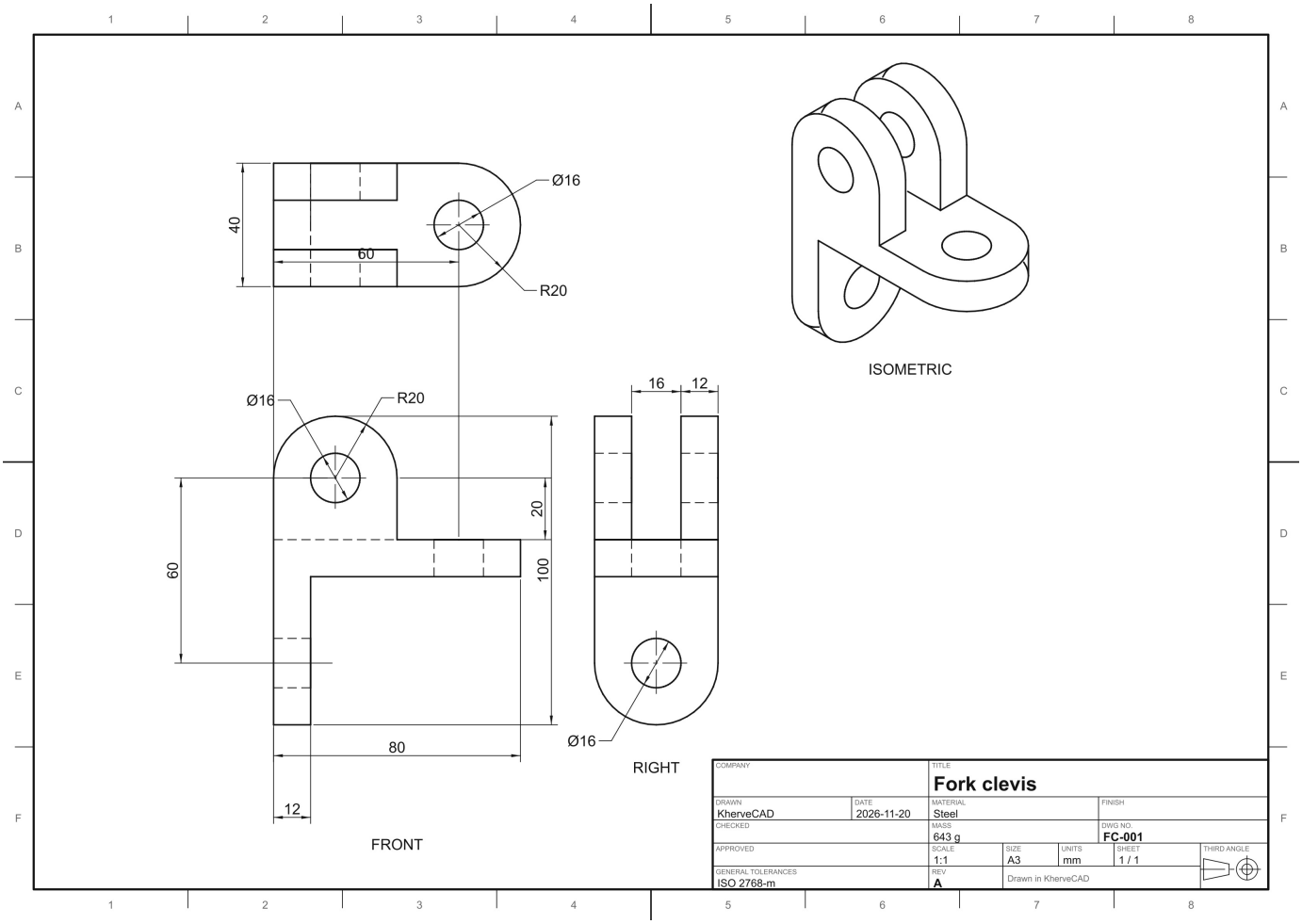

The part

This is the part we will make: a fork clevis. A base with a round end and a hole, a lug hanging under the far end, and a slotted fork on top.

Fork clevis



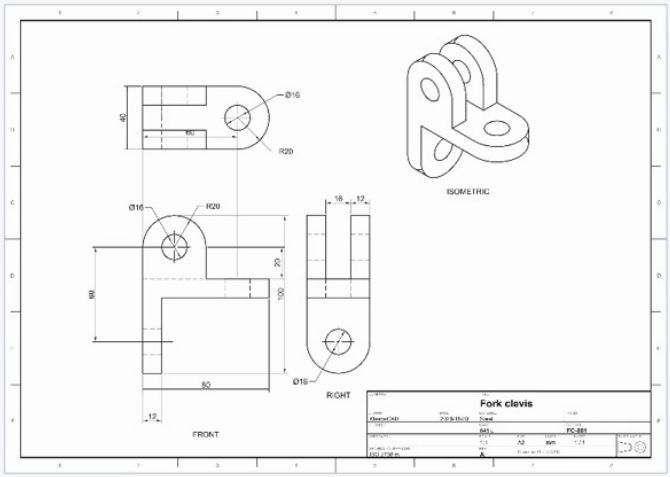

This is the part we will make: a fork clevis. A base with a round end and a hole, a lug hanging under the far end, and a slotted fork on top.

Step 1

The base: sixty long, forty wide with a round end of radius twenty, twelve thick.

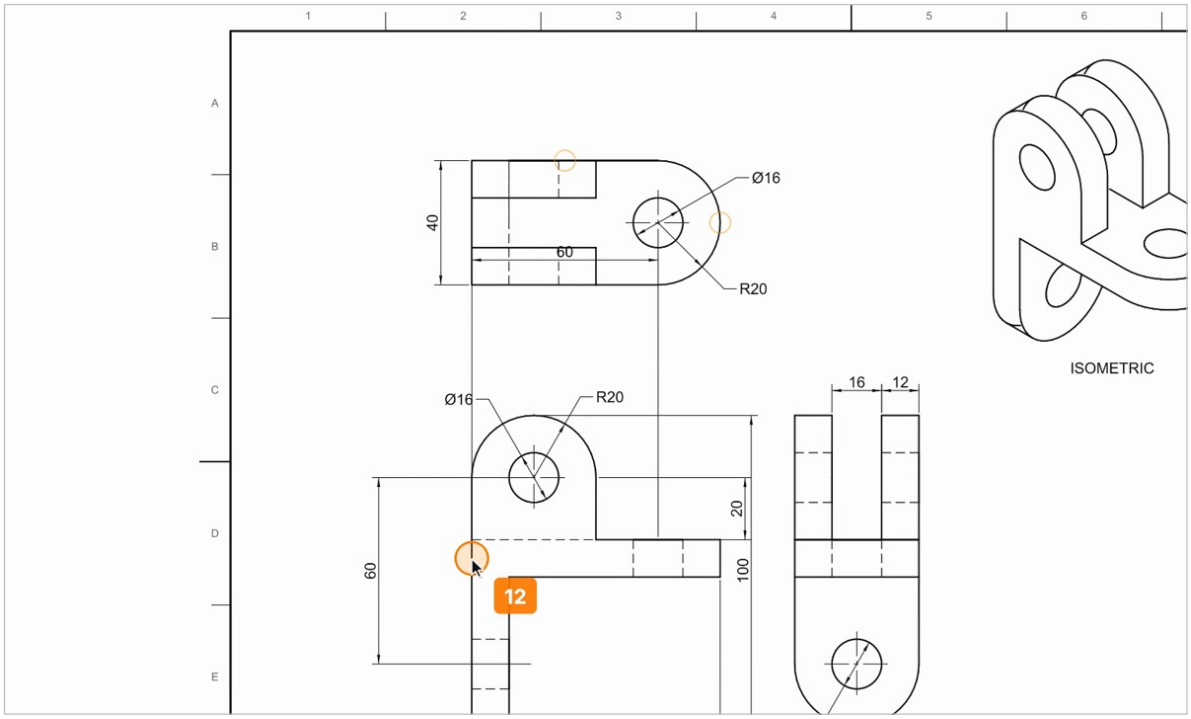

1. Click the Top Plane in the tree, then Sketch.

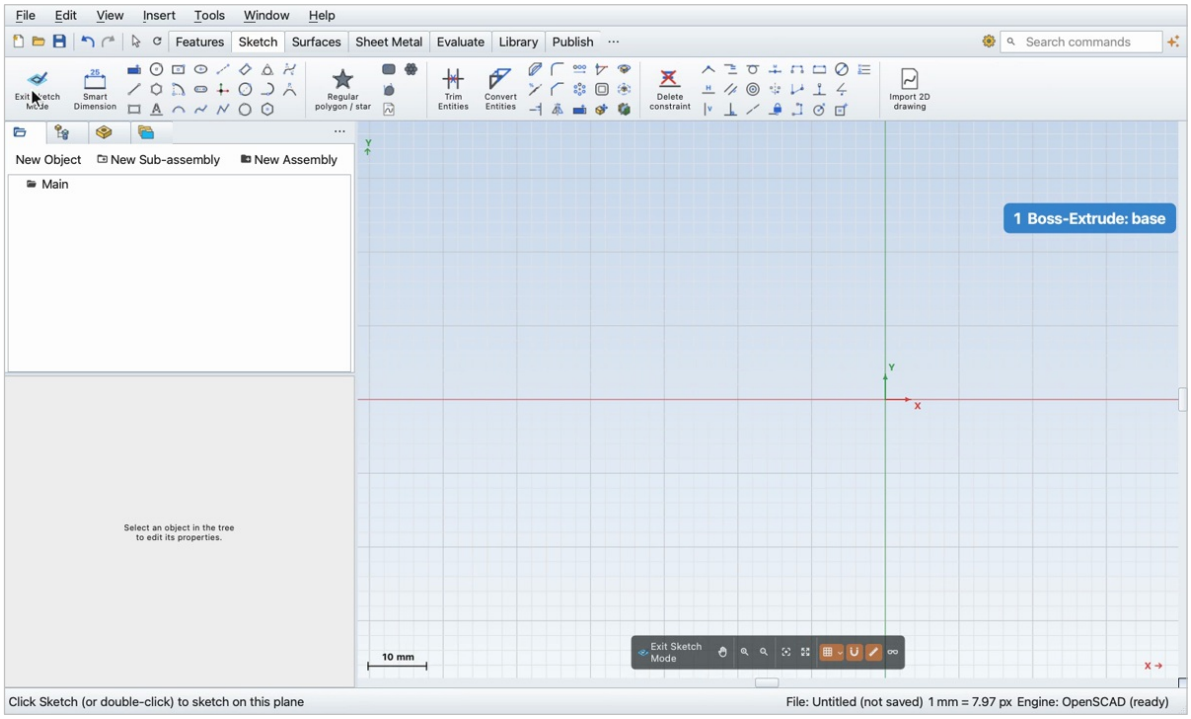

2. A rectangle sixty by forty, then a circle at its right end, radius twenty.

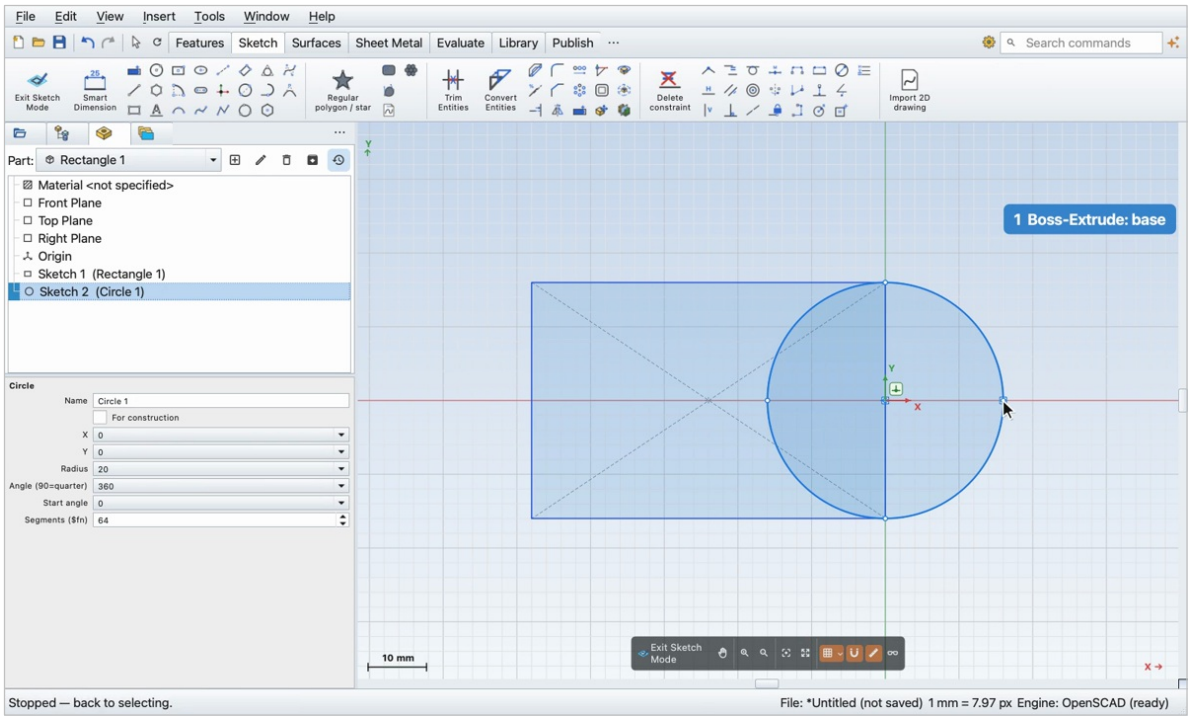

3. Smart Dimension: the top edge sixty, the left edge forty, the circle forty across.

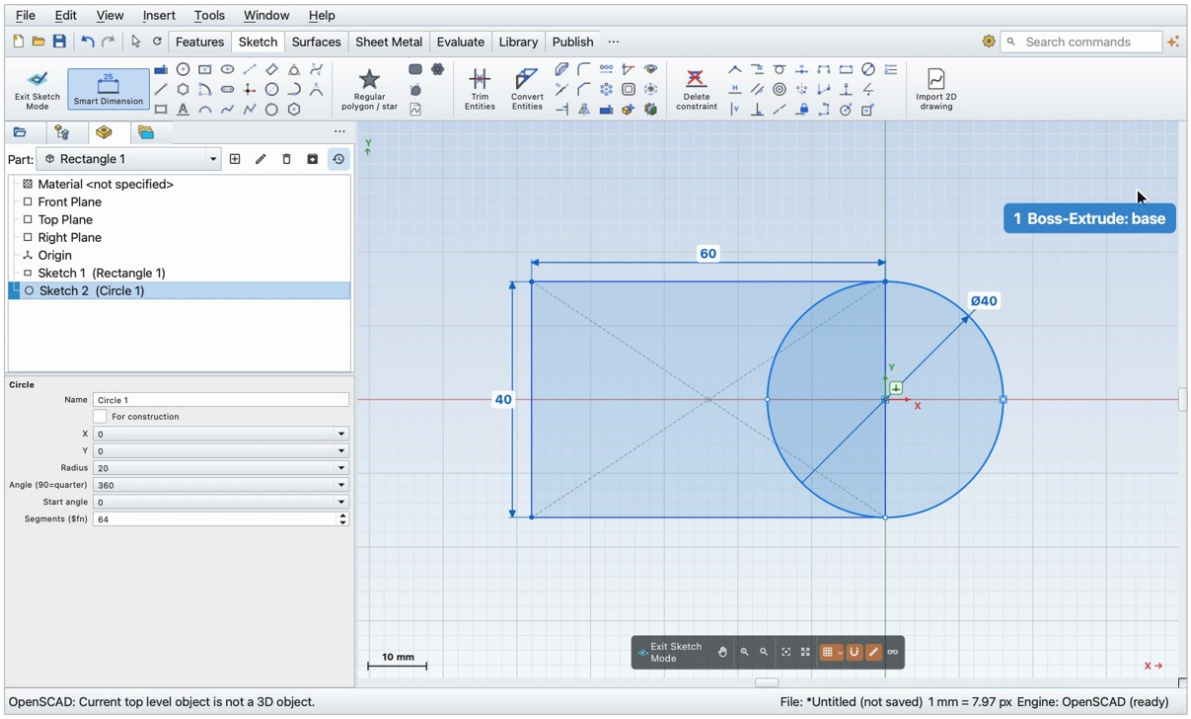

4. Features, Extruded Boss: click the rectangle, the half circle inside it and the half outside. Twelve, OK.

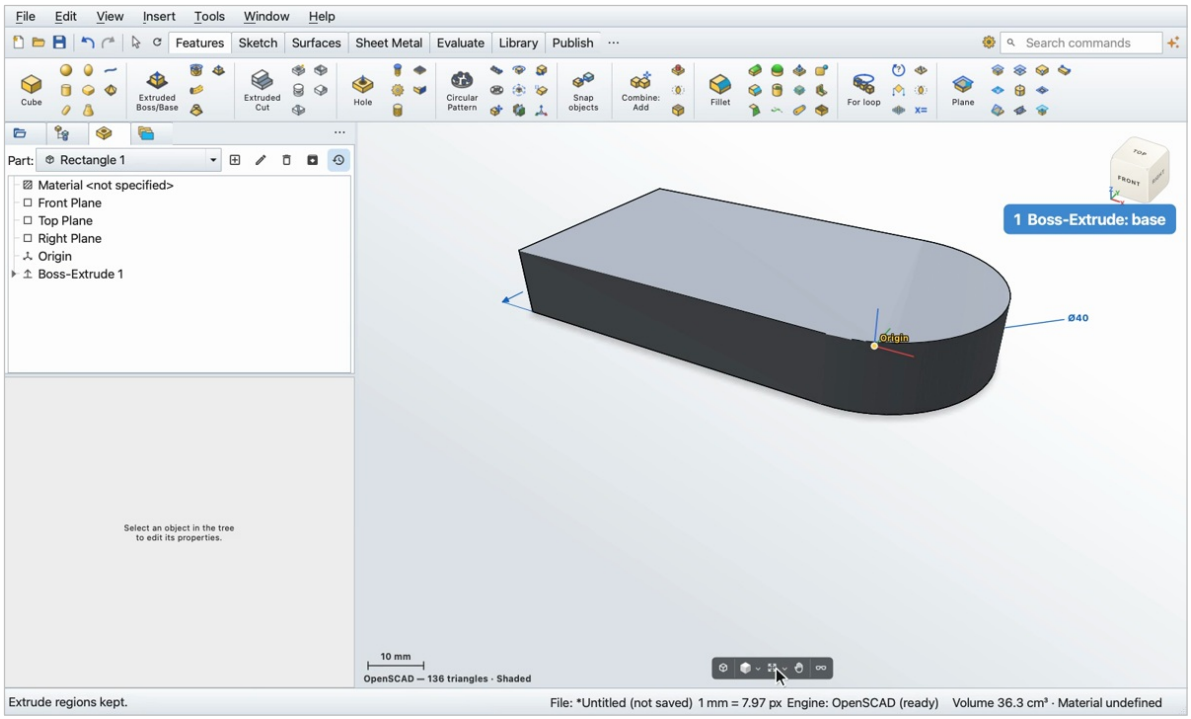

Step 2

A hole sixteen across at the centre of the round end, right through.

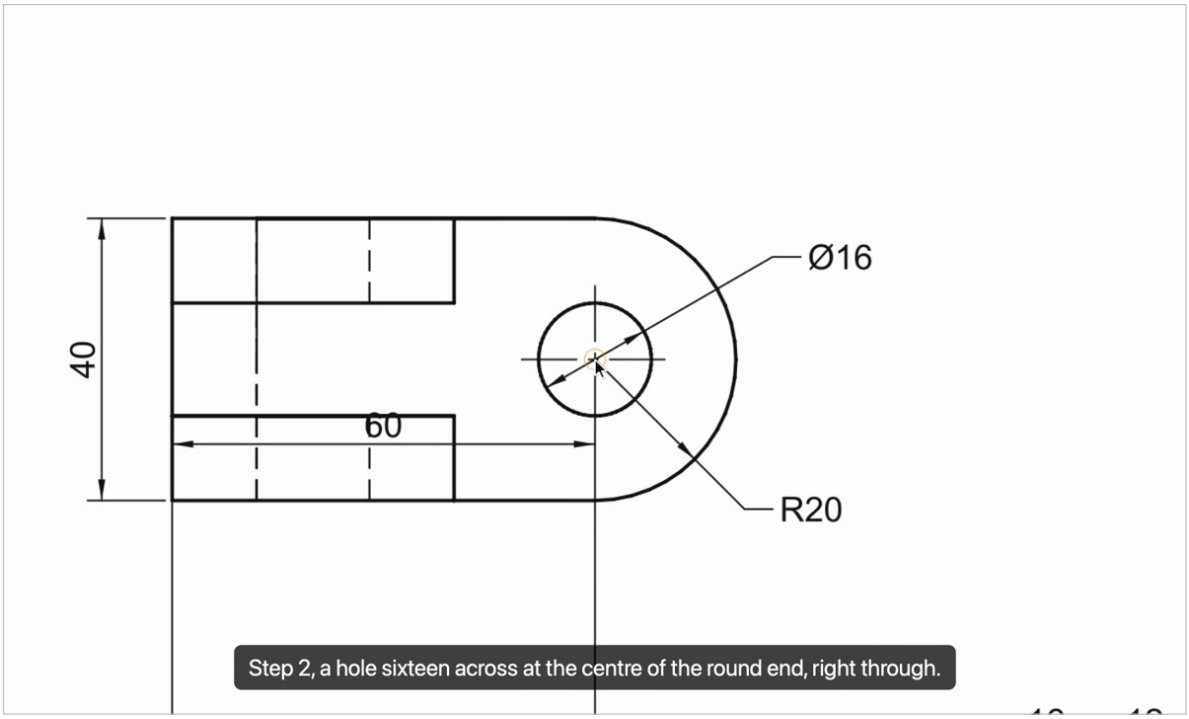

1. Sketch on the top face, a circle at the round end's centre.

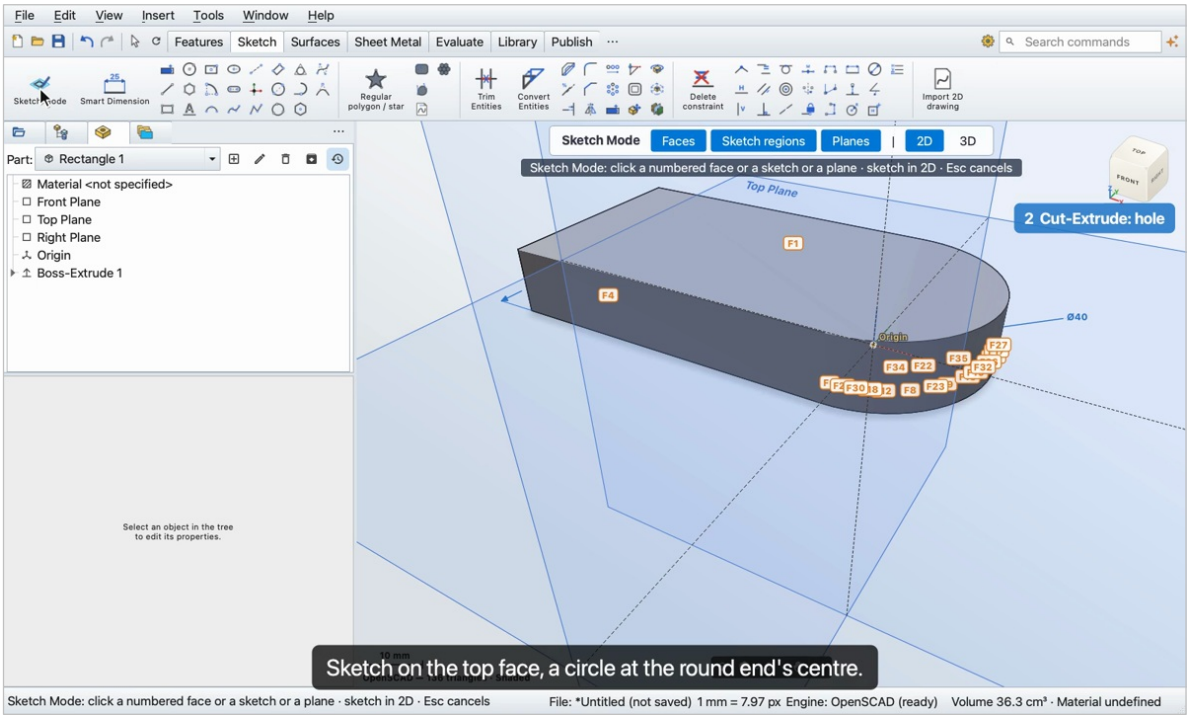

2. Sketch regions off, so the click takes the face.

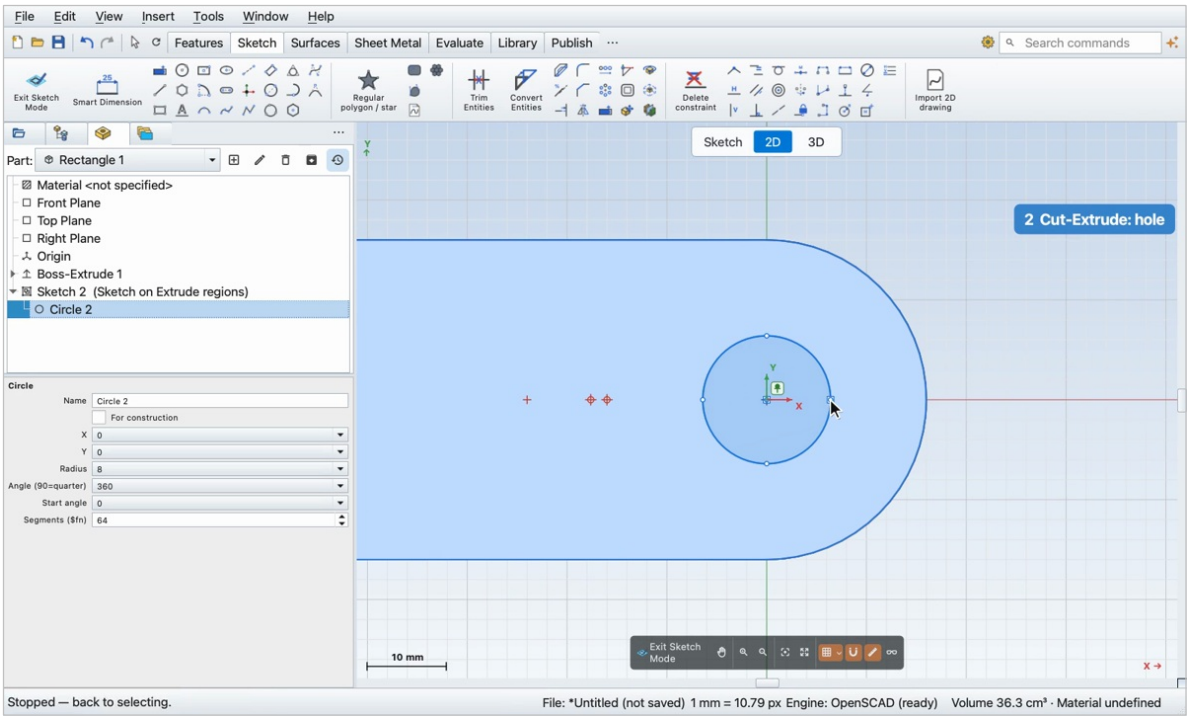

3. Smart Dimension: sixteen.

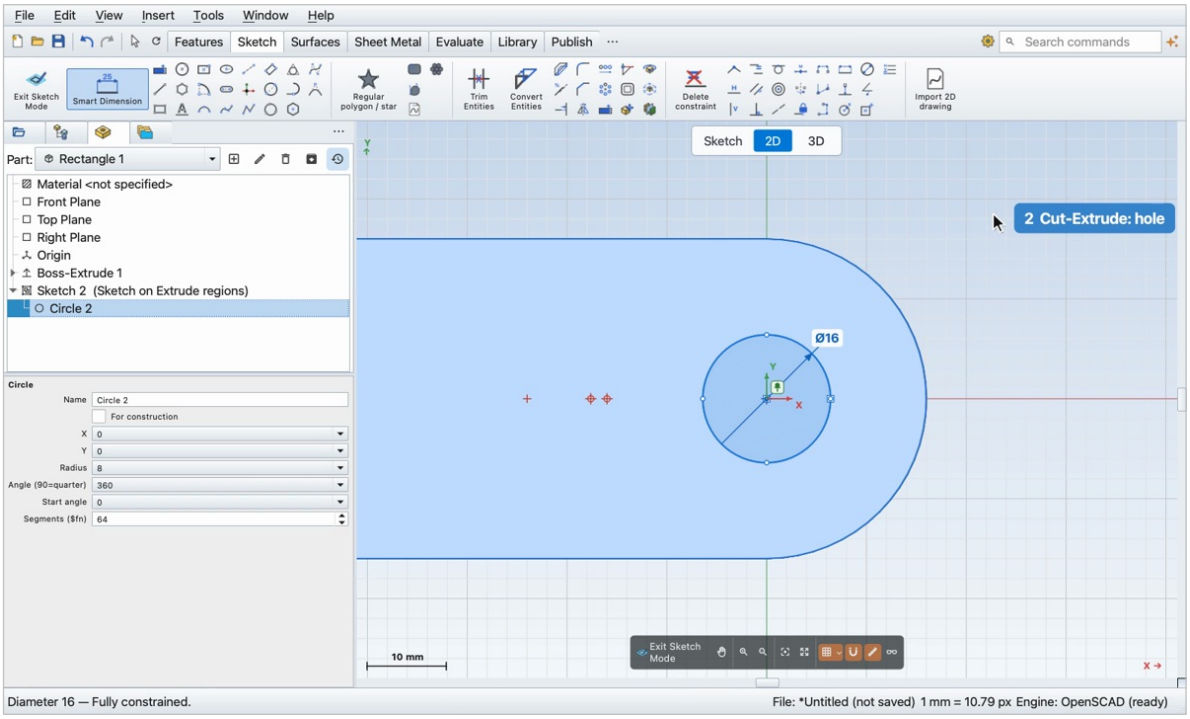

4. Extruded Cut: click inside the circle, Through All, OK.

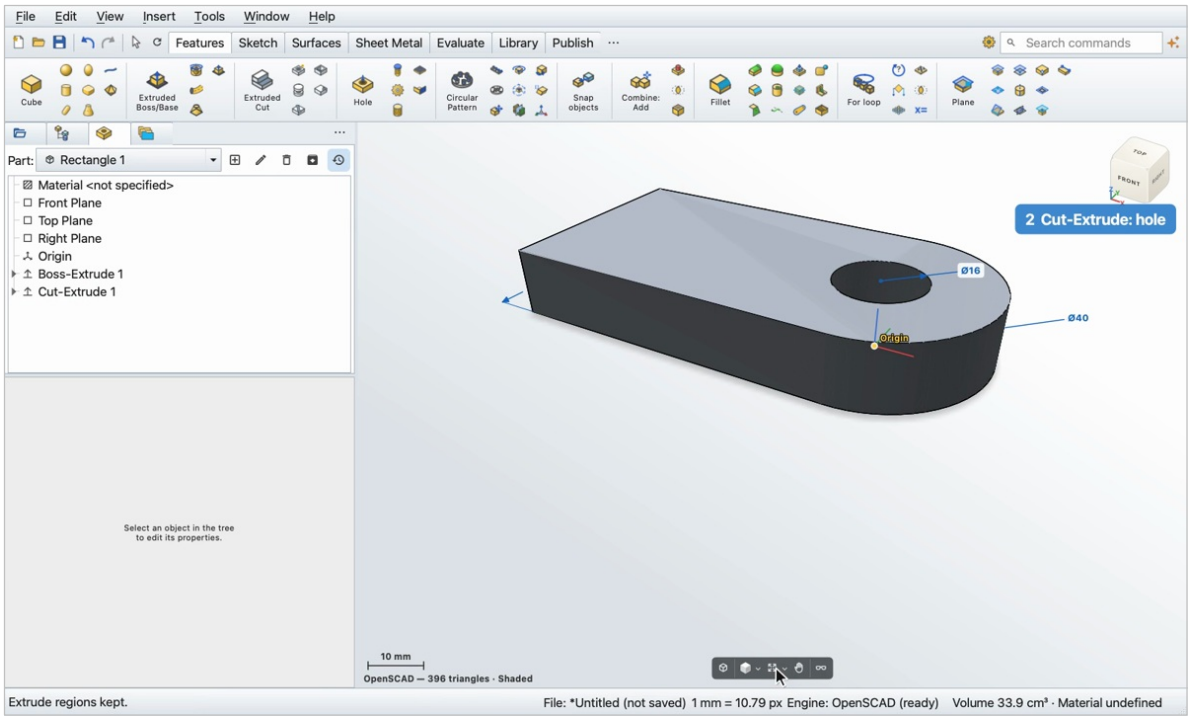

Step 3

The lug under the far end: forty wide, twenty eight down to a round end of radius twenty, twelve thick.

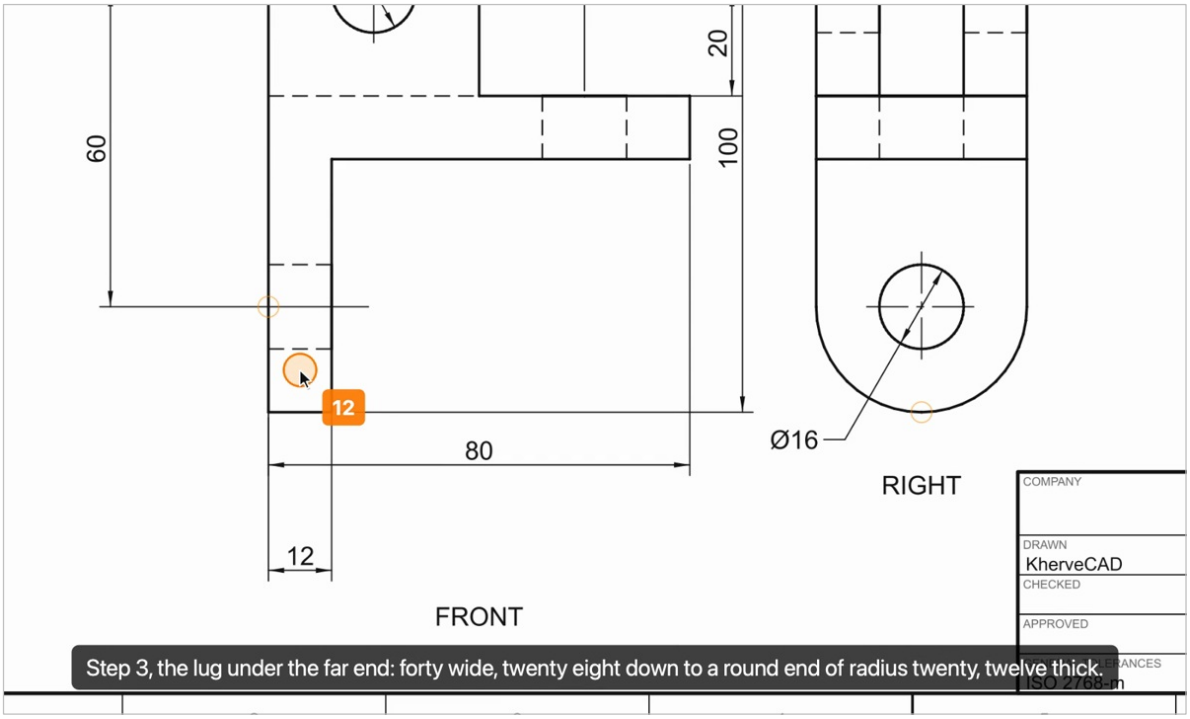

1. Turn the view, Sketch, and click the end face of the base.

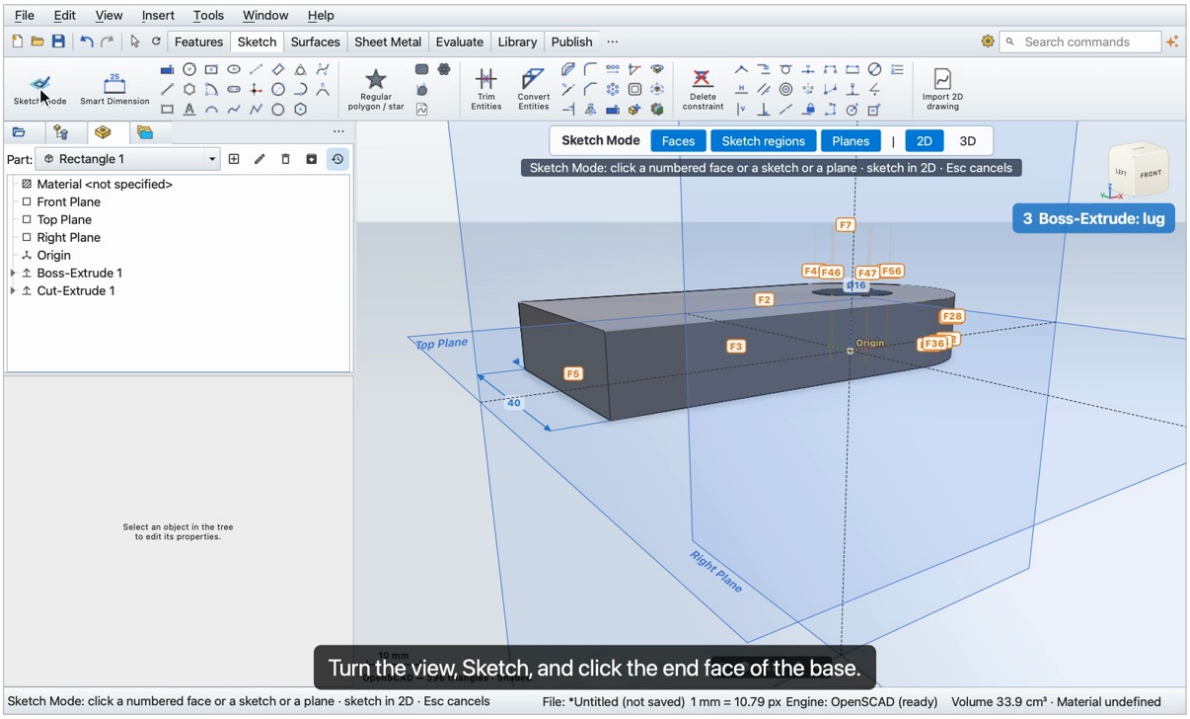

2. Sketch regions off, so the click takes the face.

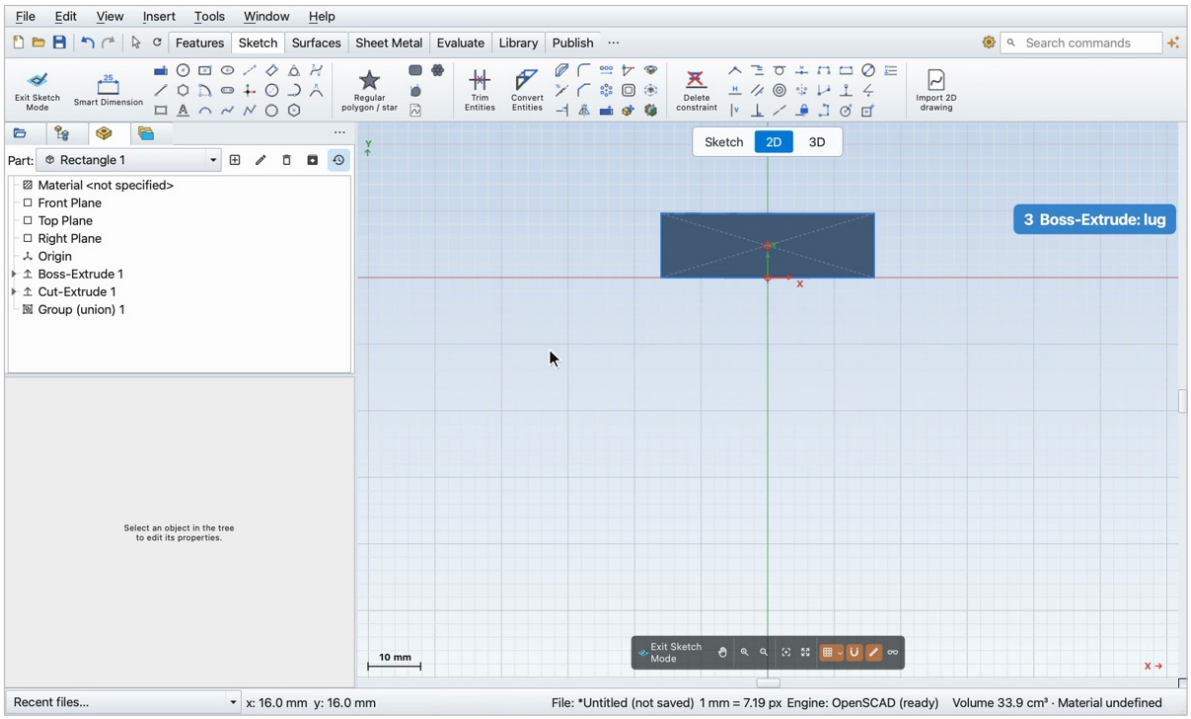

3. A rectangle from the bottom corners, twenty eight down, and a circle radius twenty on its lower edge.

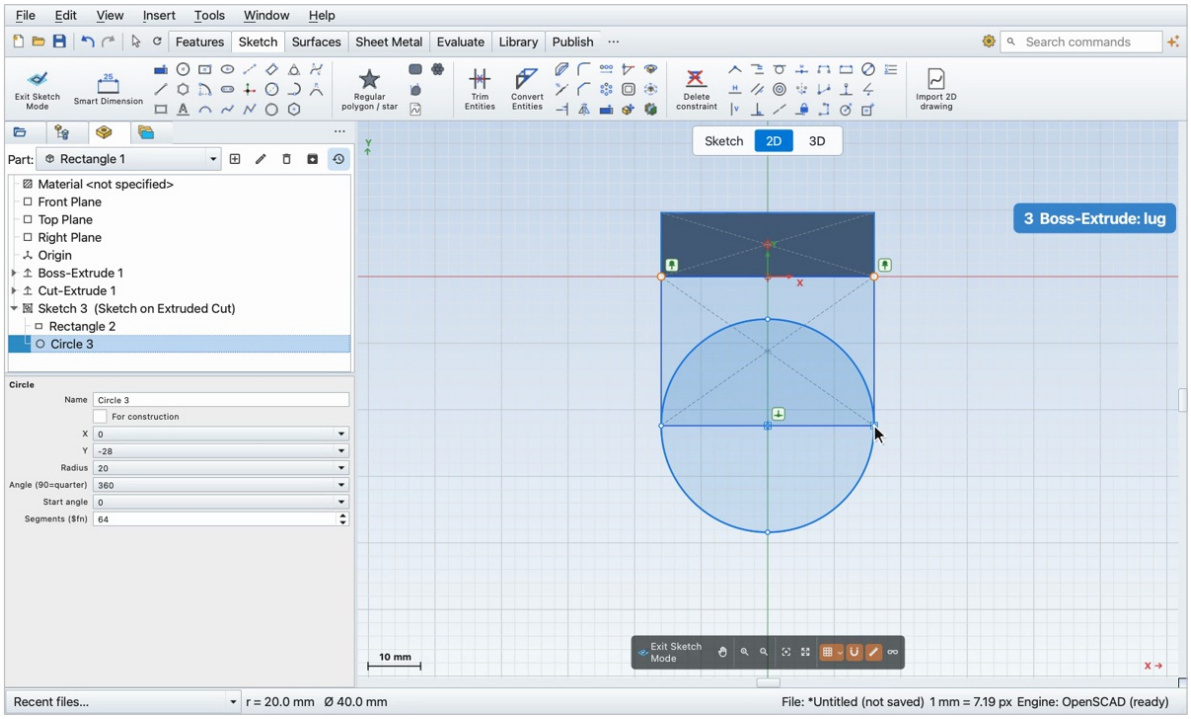

4. Smart Dimension: twenty eight, and the circle forty.

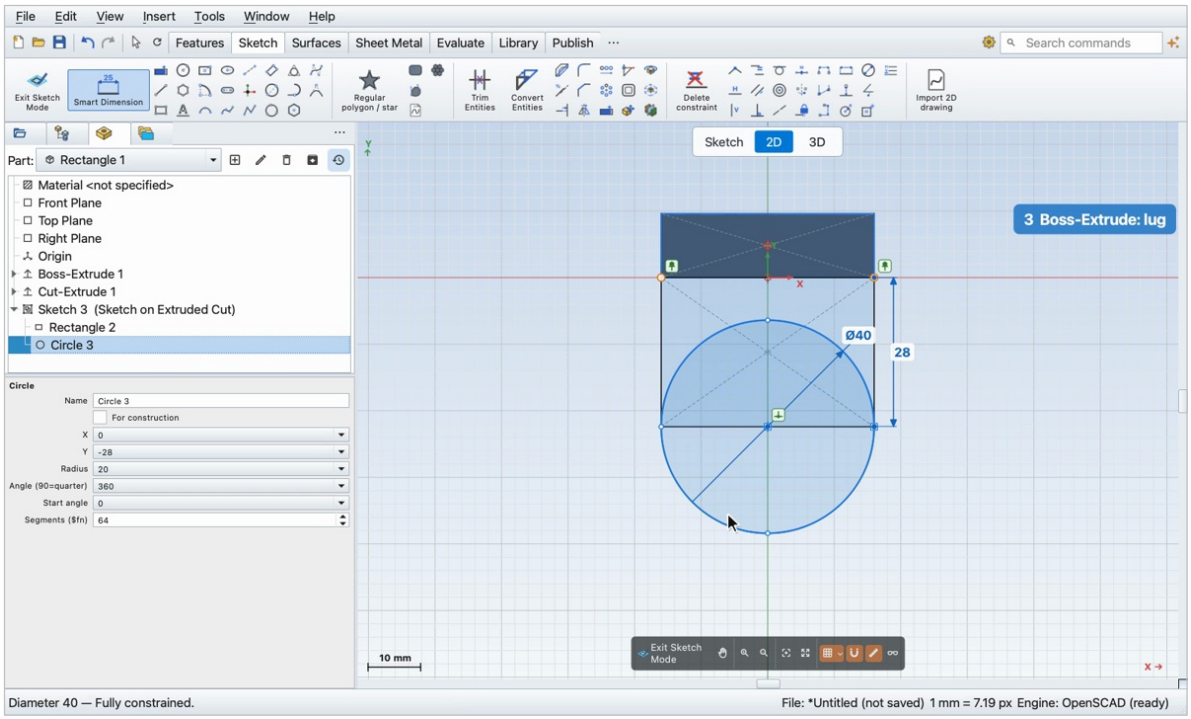

5. Extruded Boss: the three areas of the lug, twelve, Reverse so it runs under the base, OK.

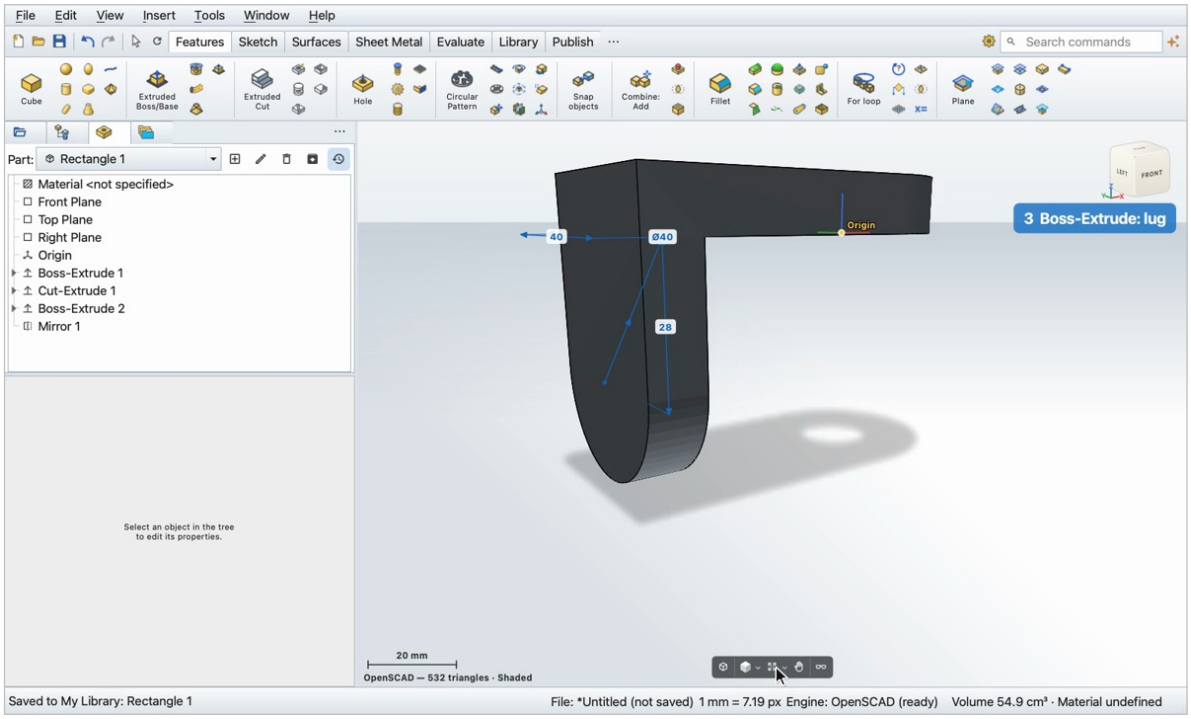

Step 4

A hole sixteen across through the lug, at the centre of its round end.

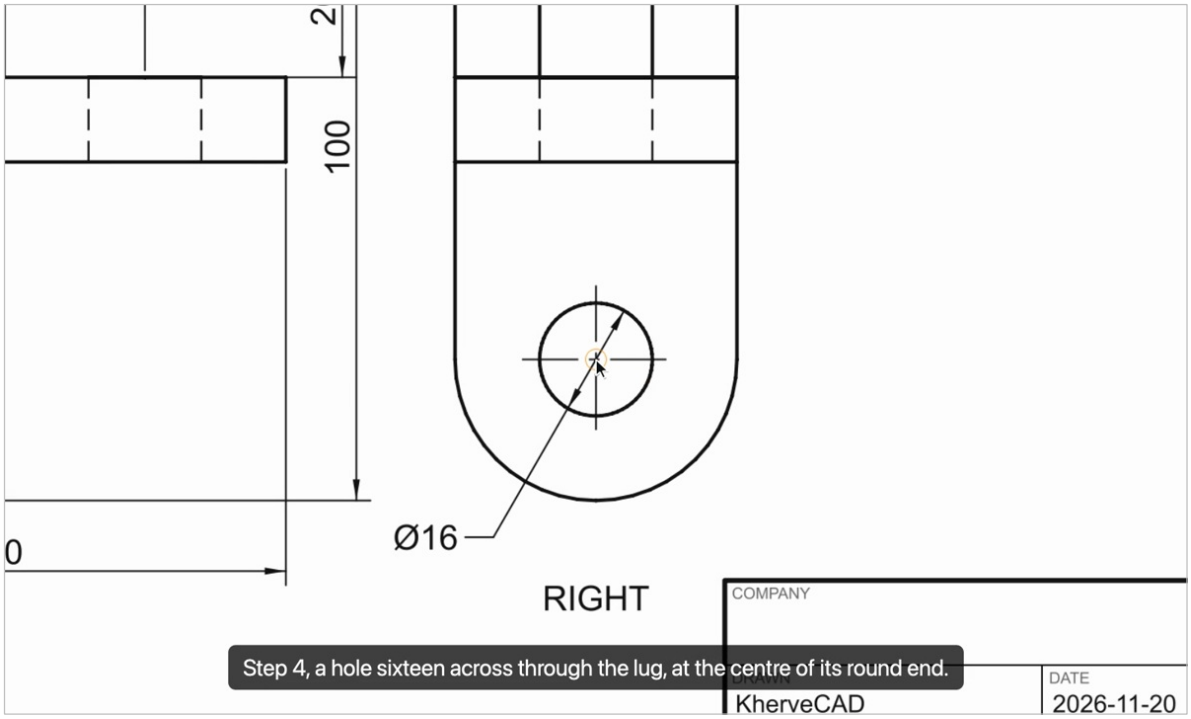

1. Sketch on the lug's face, a circle at the centre of the round end, sixteen across.

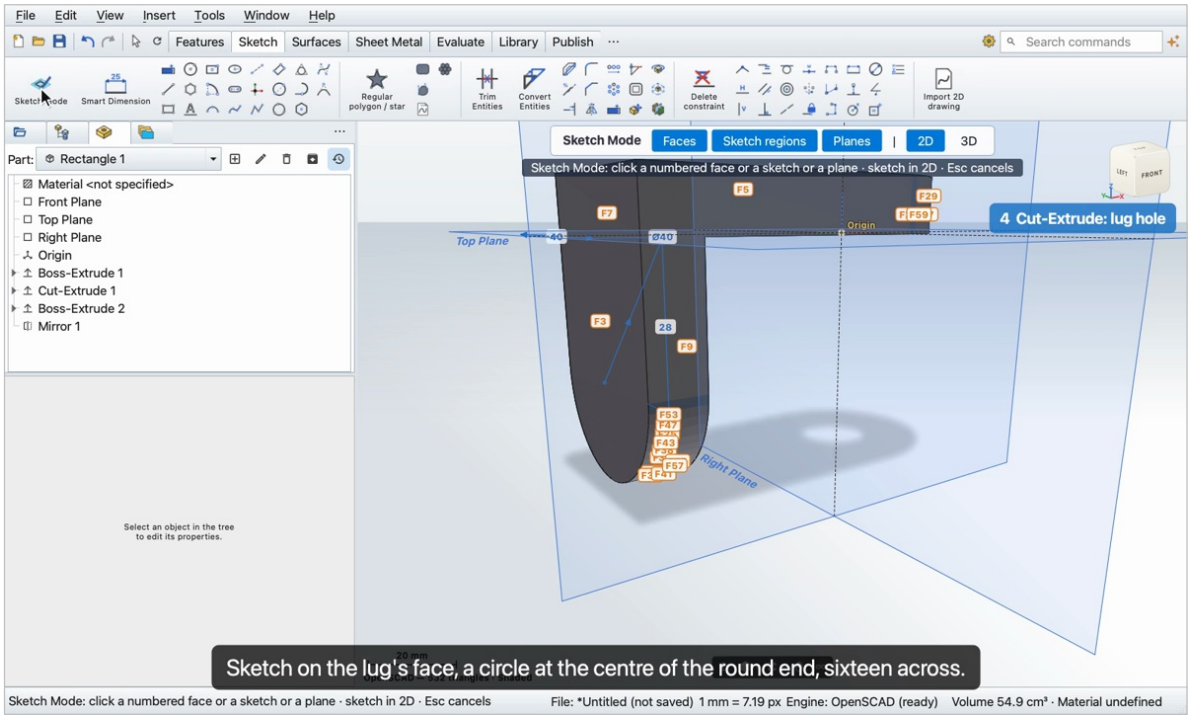

2. Sketch regions off, so the click takes the face.

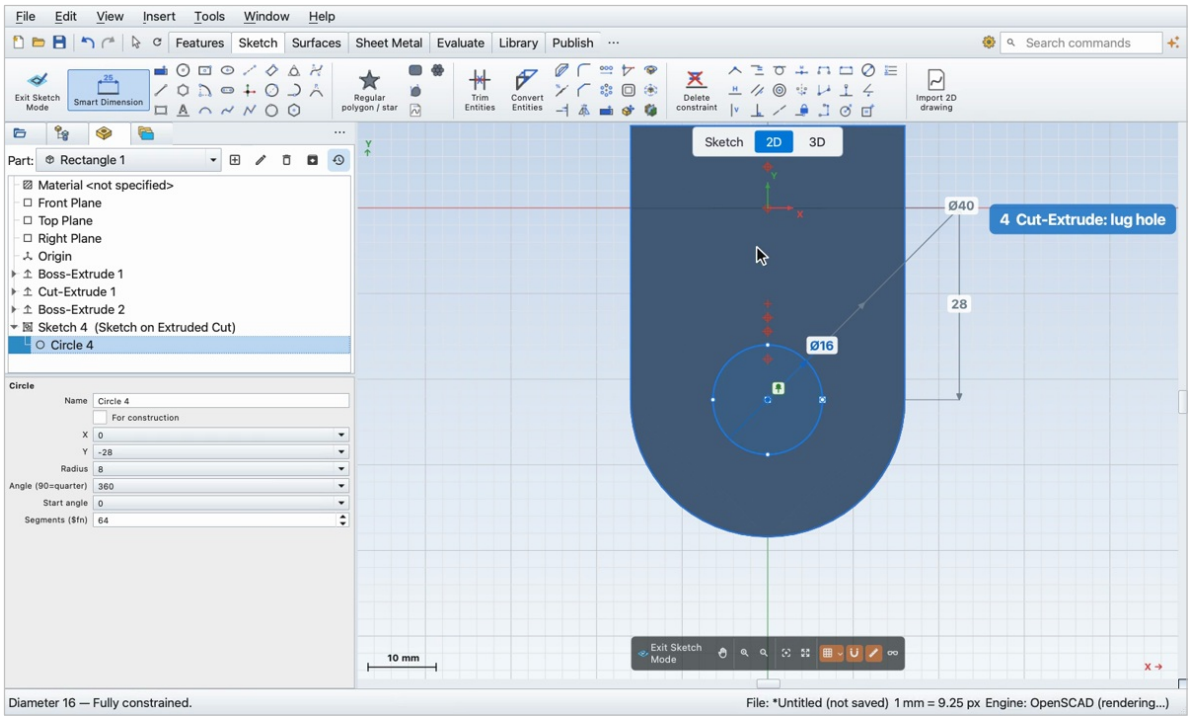

3. Extruded Cut: the circle, Through All, OK.

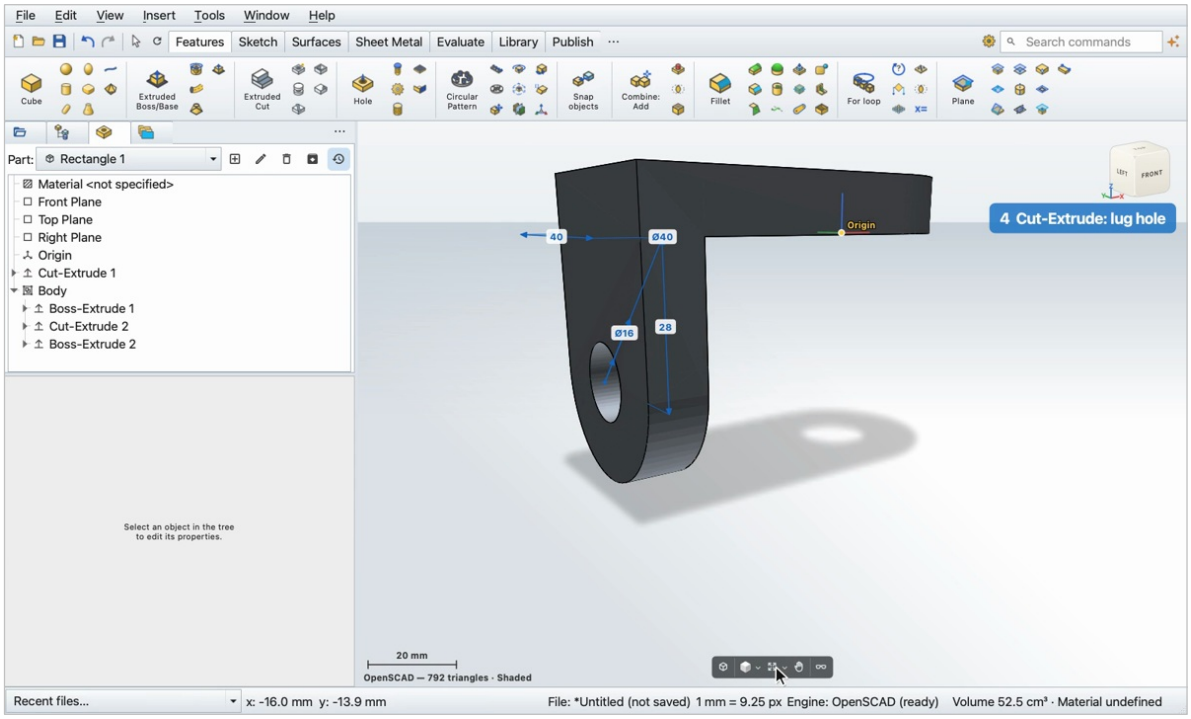

Step 5

The fork on the Front plane: forty wide, twenty up from the base and a round top of radius twenty; forty thick on the middle plane.

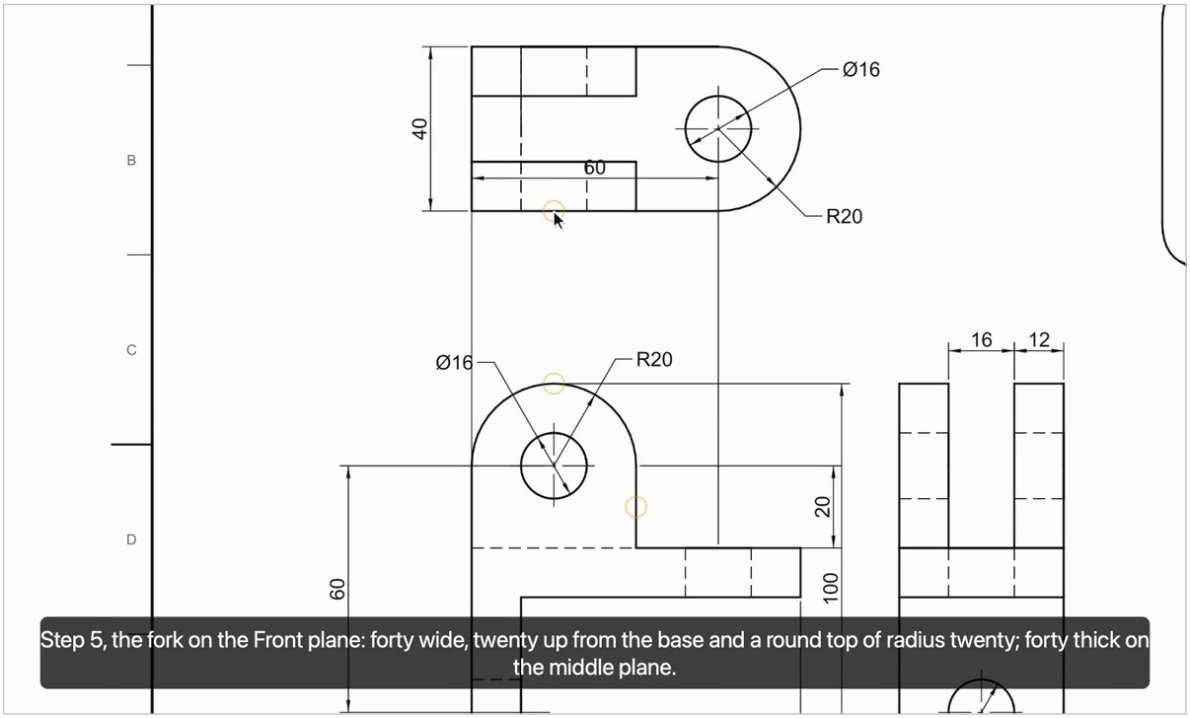

1. Click the Front Plane, then Sketch.

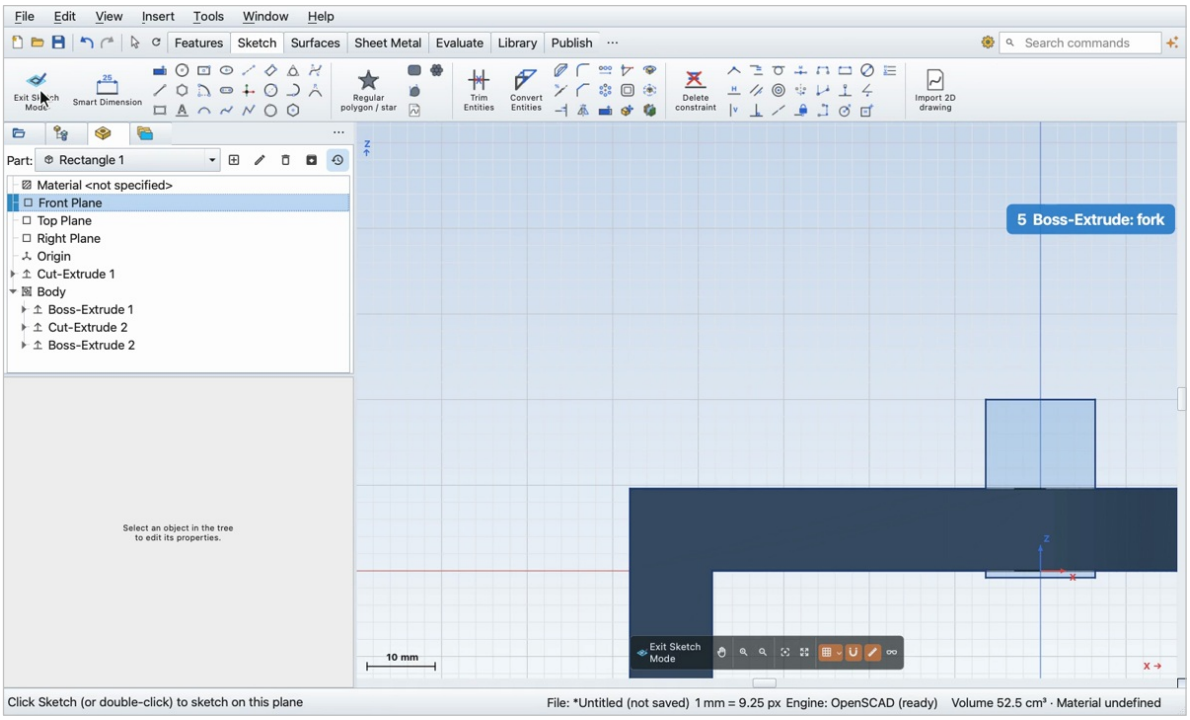

2. A rectangle forty by twenty on top of the base, and a circle radius twenty on its top edge.

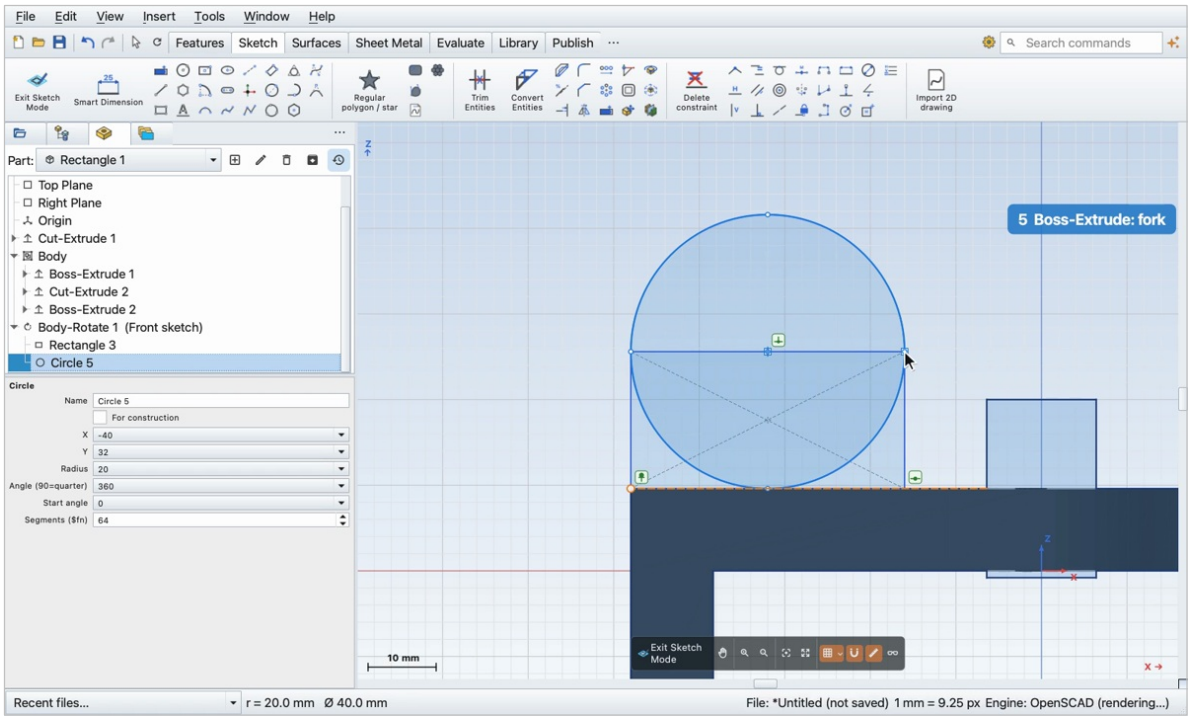

3. Smart Dimension: forty, twenty, and the circle forty across.

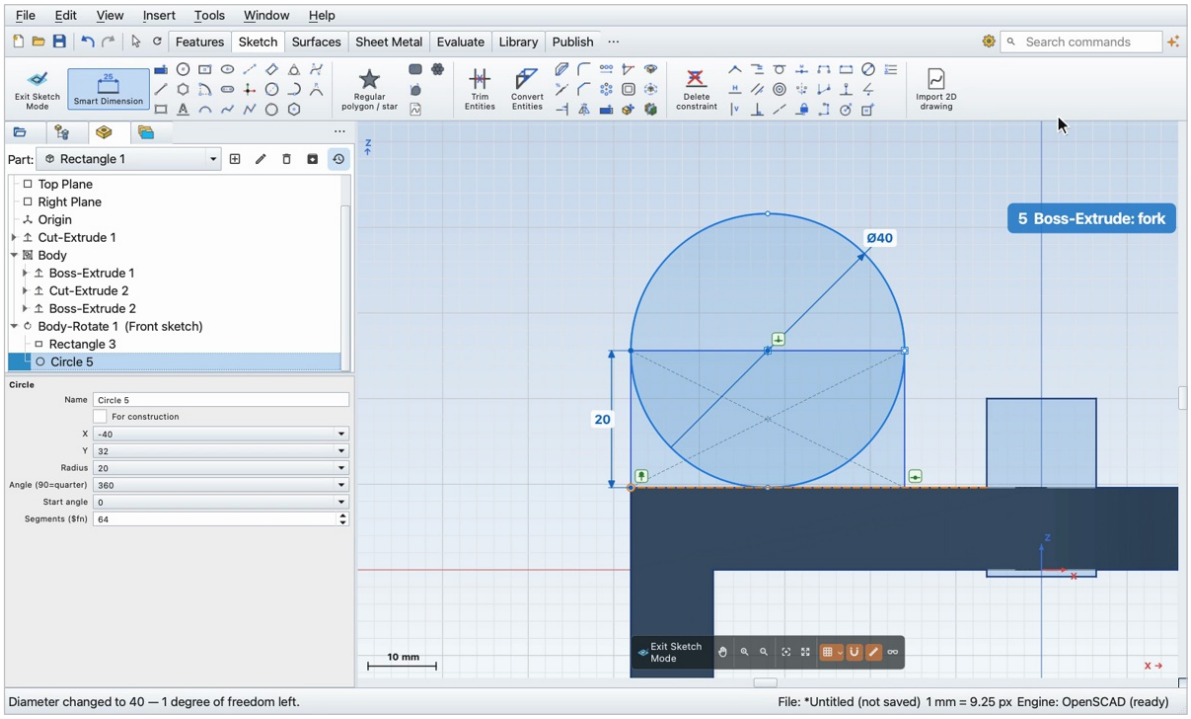

4. Extruded Boss: click the four areas, Mid Plane, forty, OK.

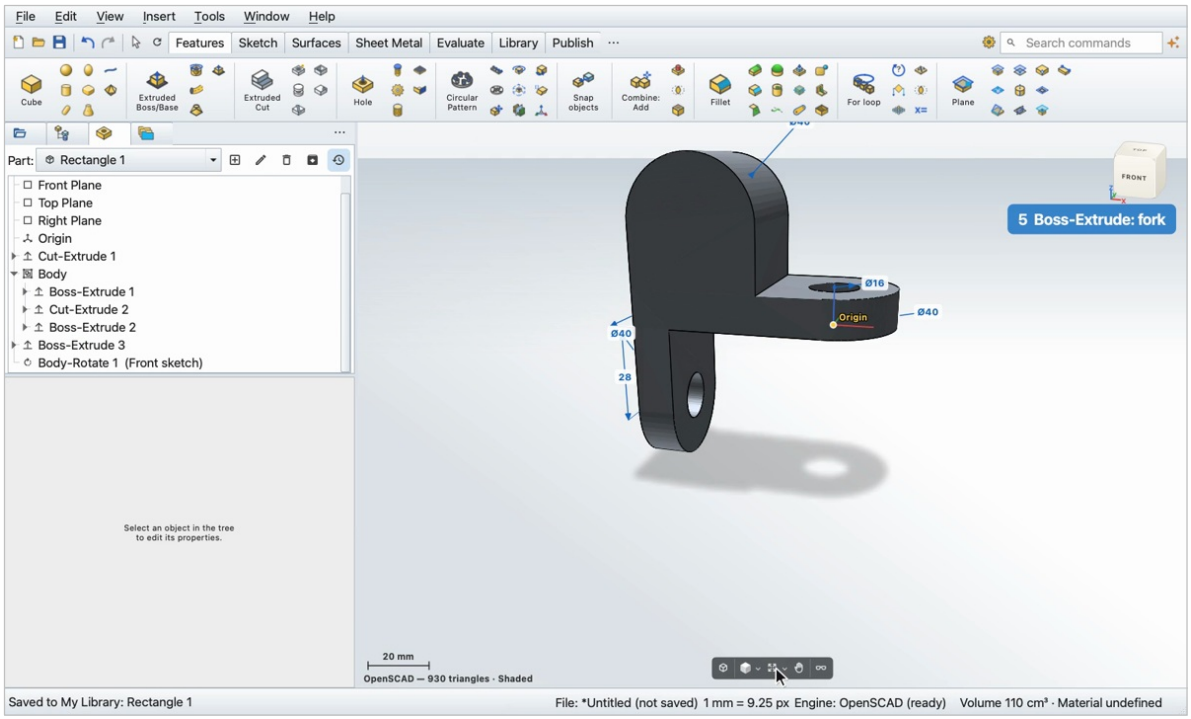

Step 6

A hole sixteen across through the fork, at the centre of its round top.

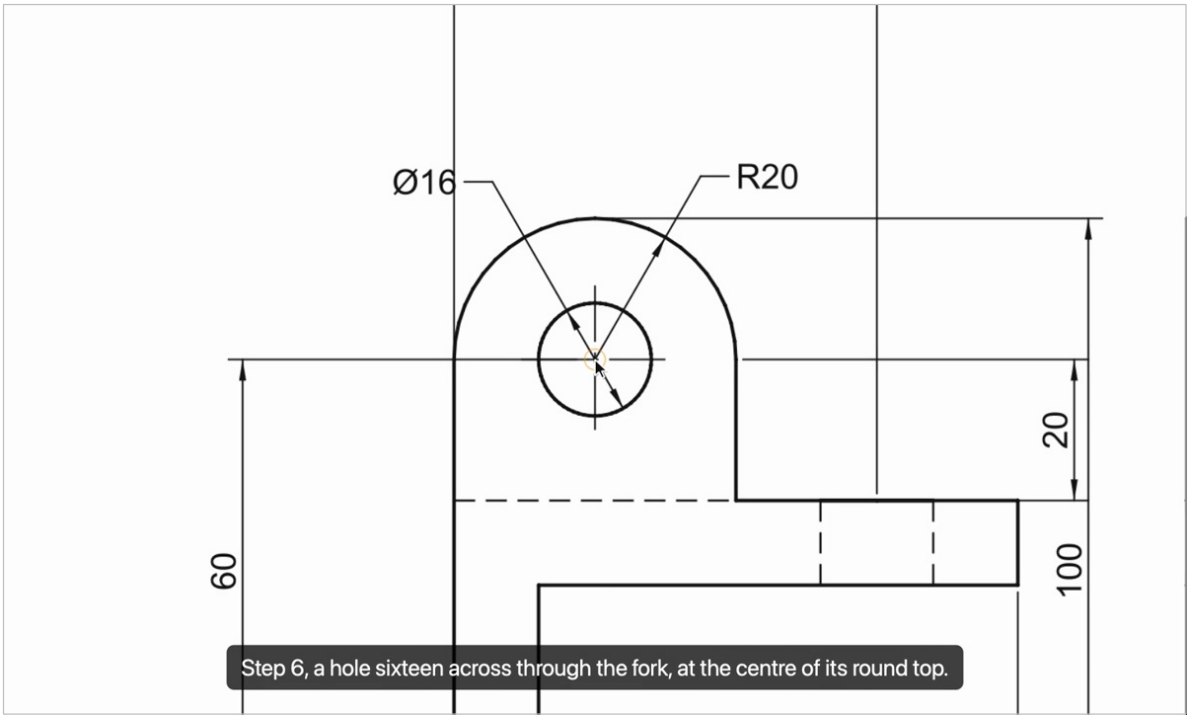

1. Sketch on the front face of the fork, a circle sixteen across.

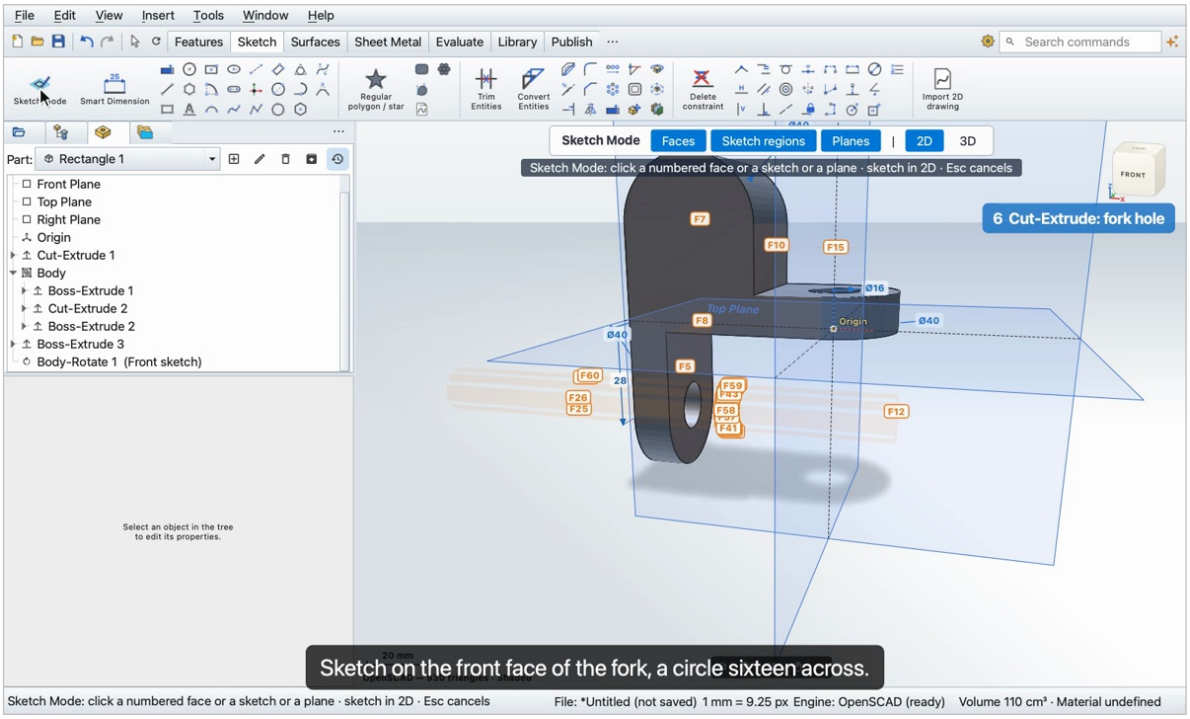

2. Sketch regions off, so the click takes the face.

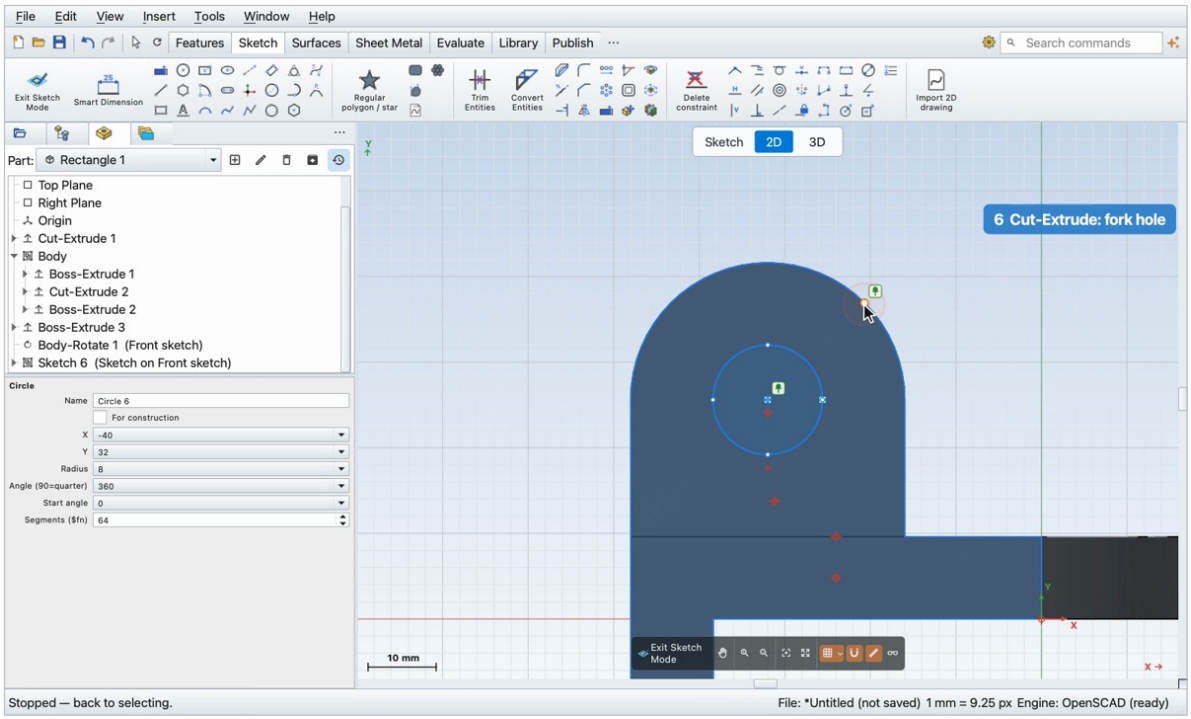

3. Extruded Cut: the circle, Through All, OK.

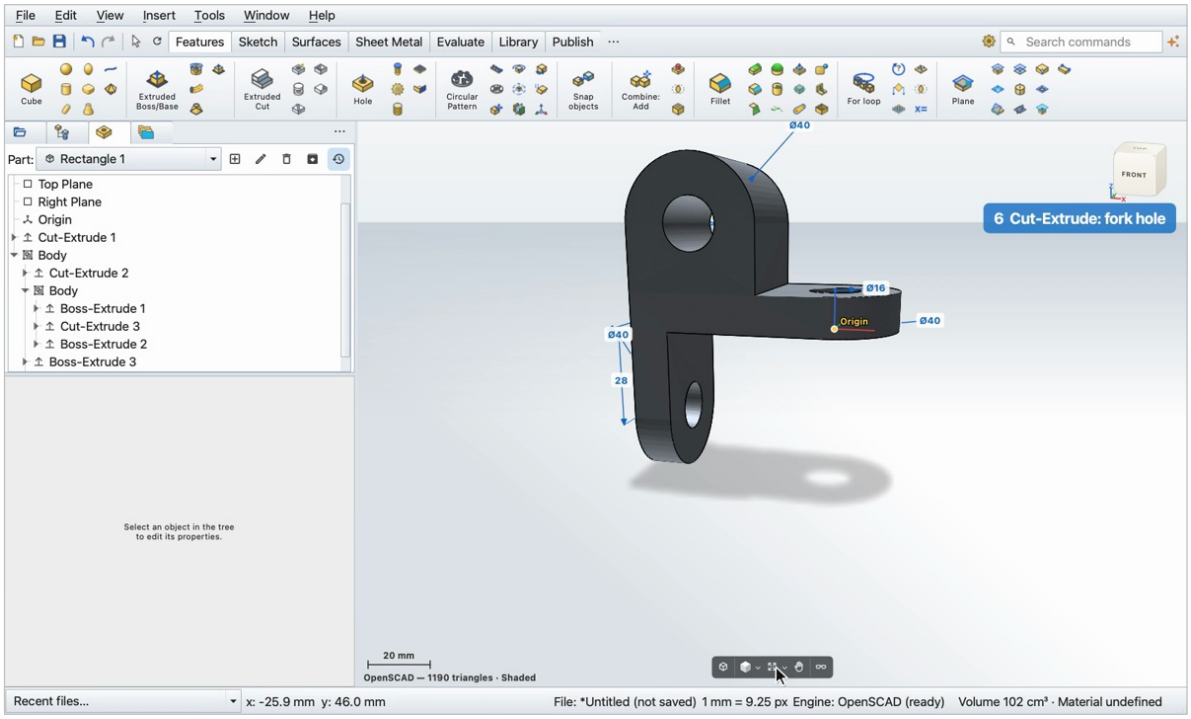

Step 7

The slot between the prongs: sixteen wide, from the top down to the base.

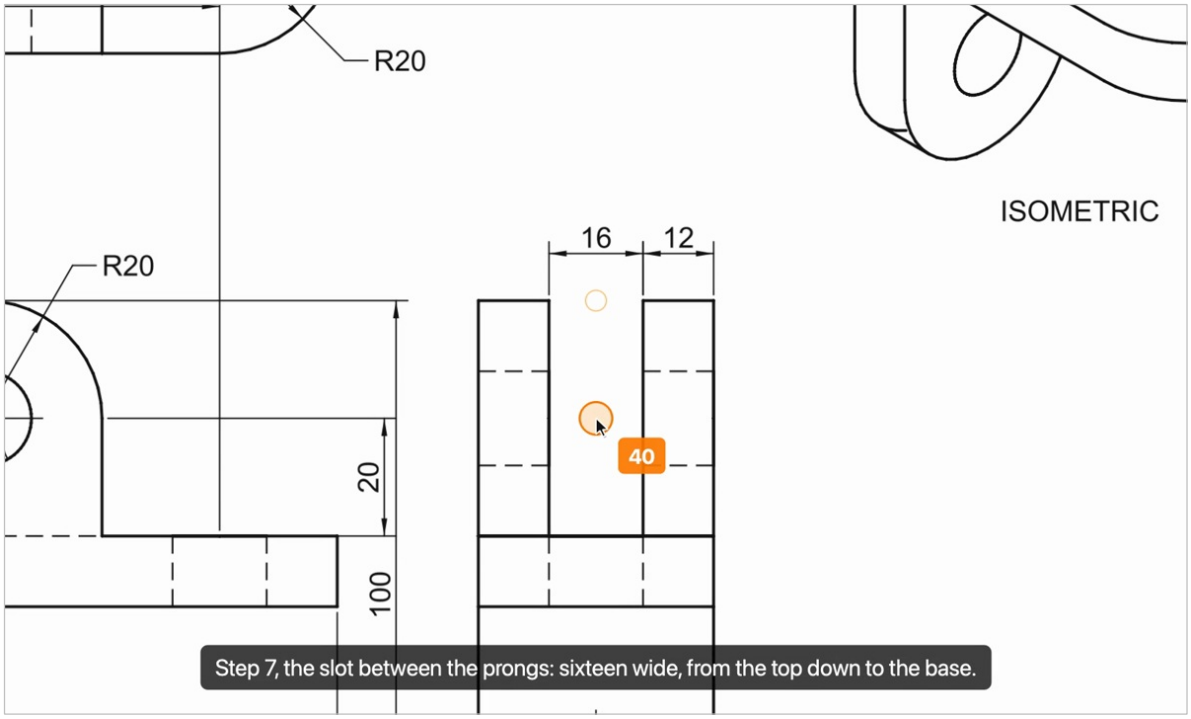

1. Click the Right Plane, Sketch: a rectangle sixteen wide, from the base up past the top.

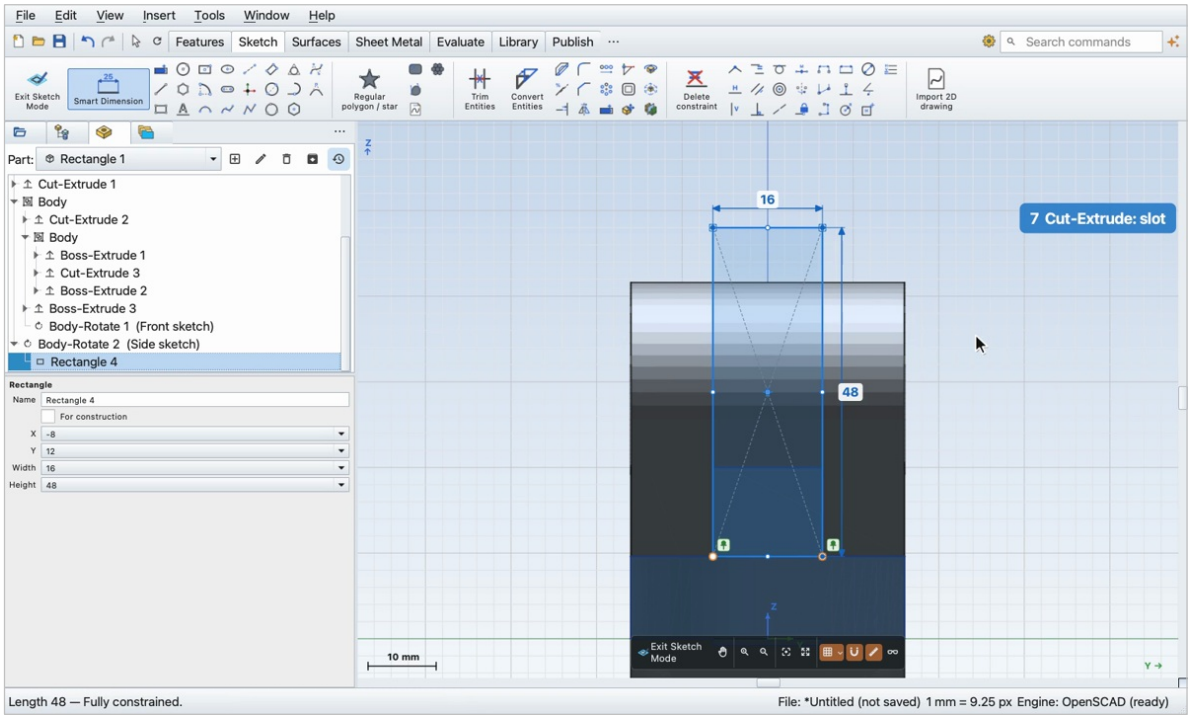

2. Extruded Cut: the rectangle, Through All, OK.

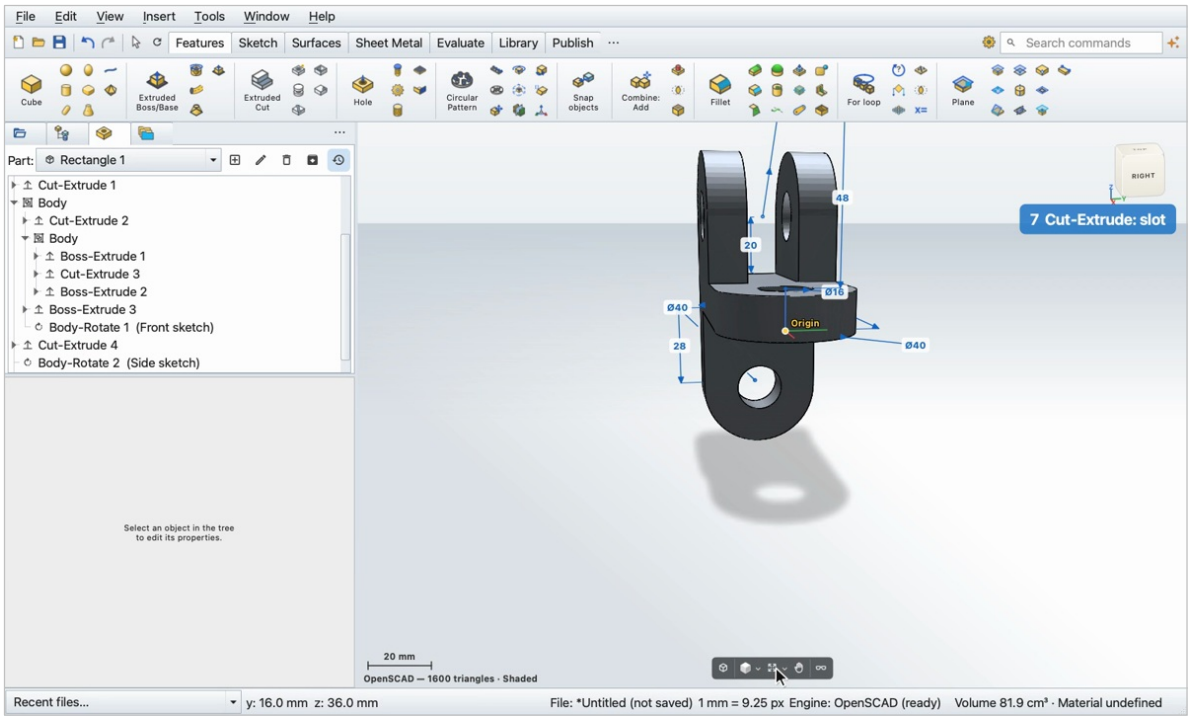

3. The fork clevis is done: eighty long, forty wide, one hundred high.

