Pivot bracket

Built in KherveCAD with the mouse, step by step, as in the video youtube.com/watch?v=CBULMUqQkb8. Each numbered line is one action; its picture shows the screen once it is done (the button used is outlined, the pointer shows where to click).

The drawing

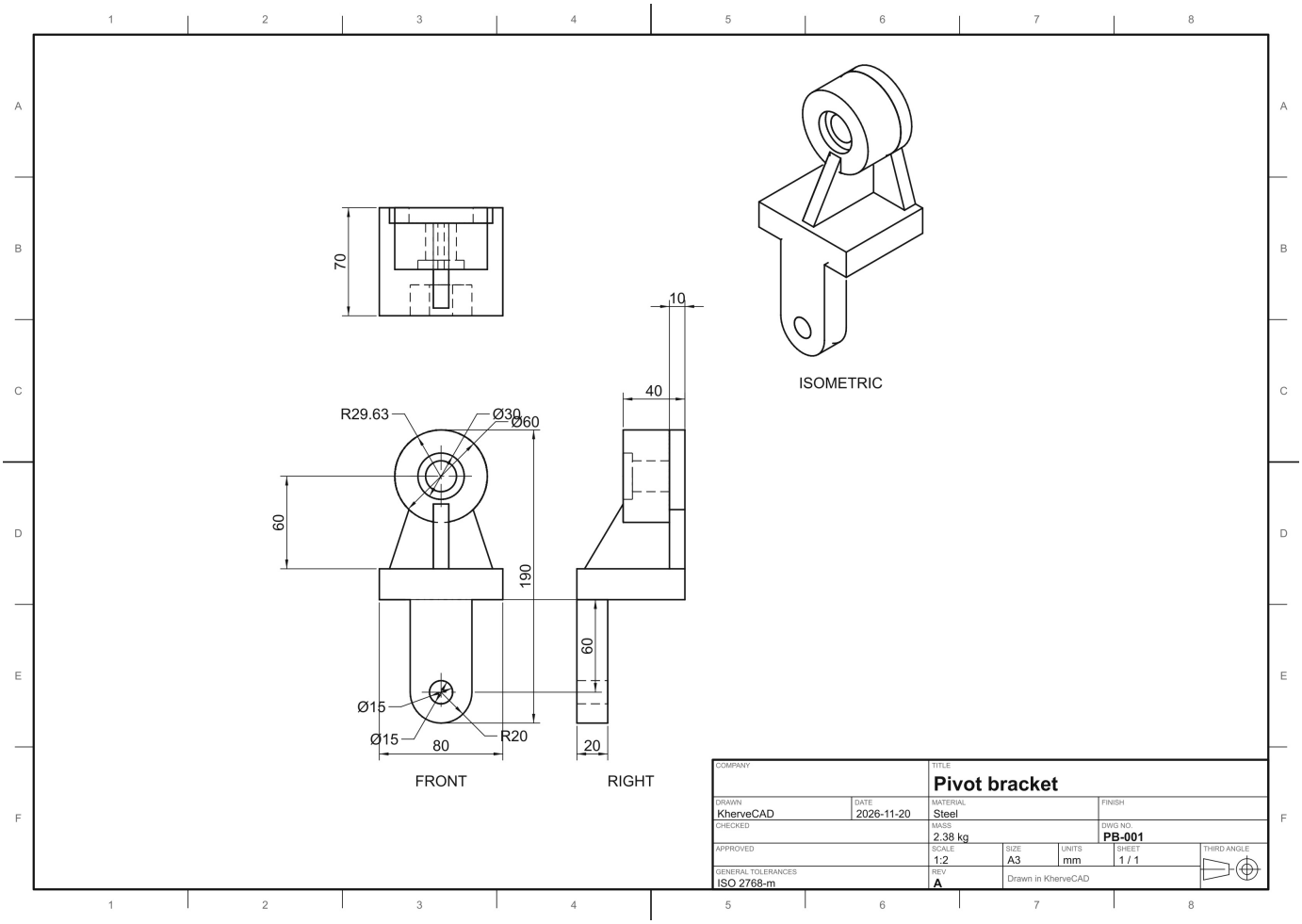

The part

This is the part we will make: a pivot bracket. A block, an upright with a counterbored boss, a lug hanging under the front, and a rib.

Pivot bracket

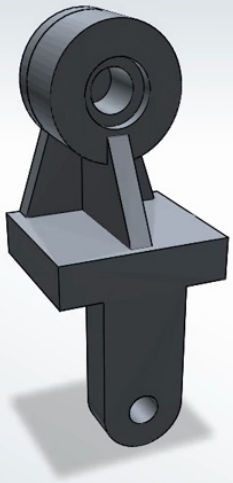

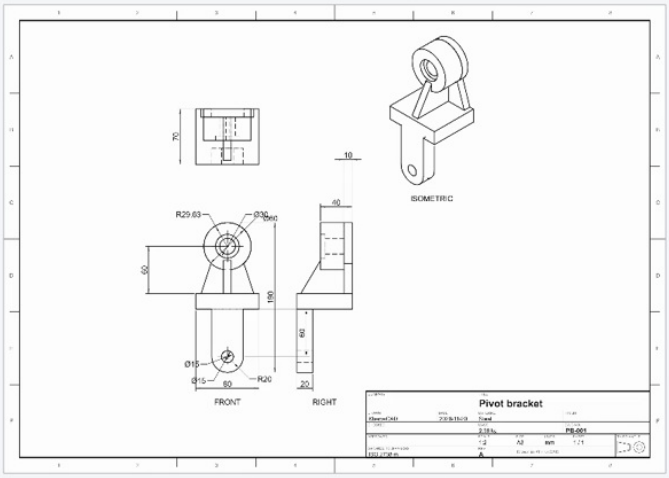

This is the part we will make: a pivot bracket. A block, an upright with a counterbored boss, a lug hanging under the front, and a rib.

Step 1

The block: eighty by seventy, twenty high.

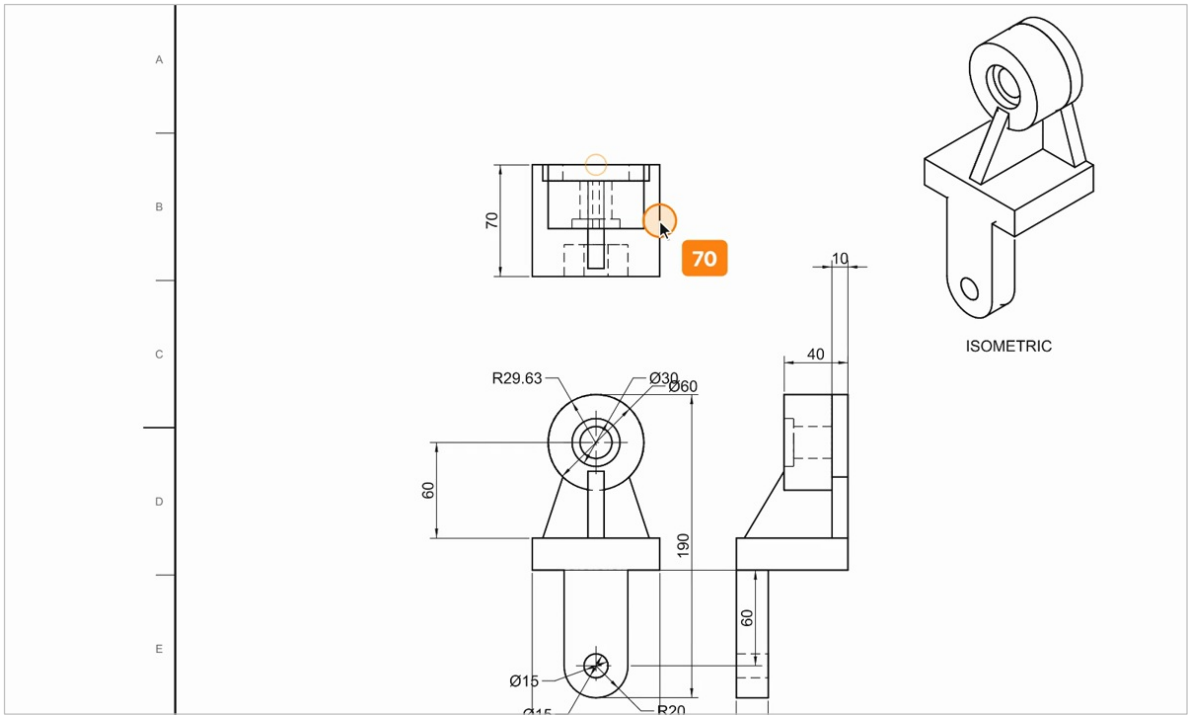

1. Click the Top Plane, then Sketch: a rectangle from the origin edge, eighty by seventy.

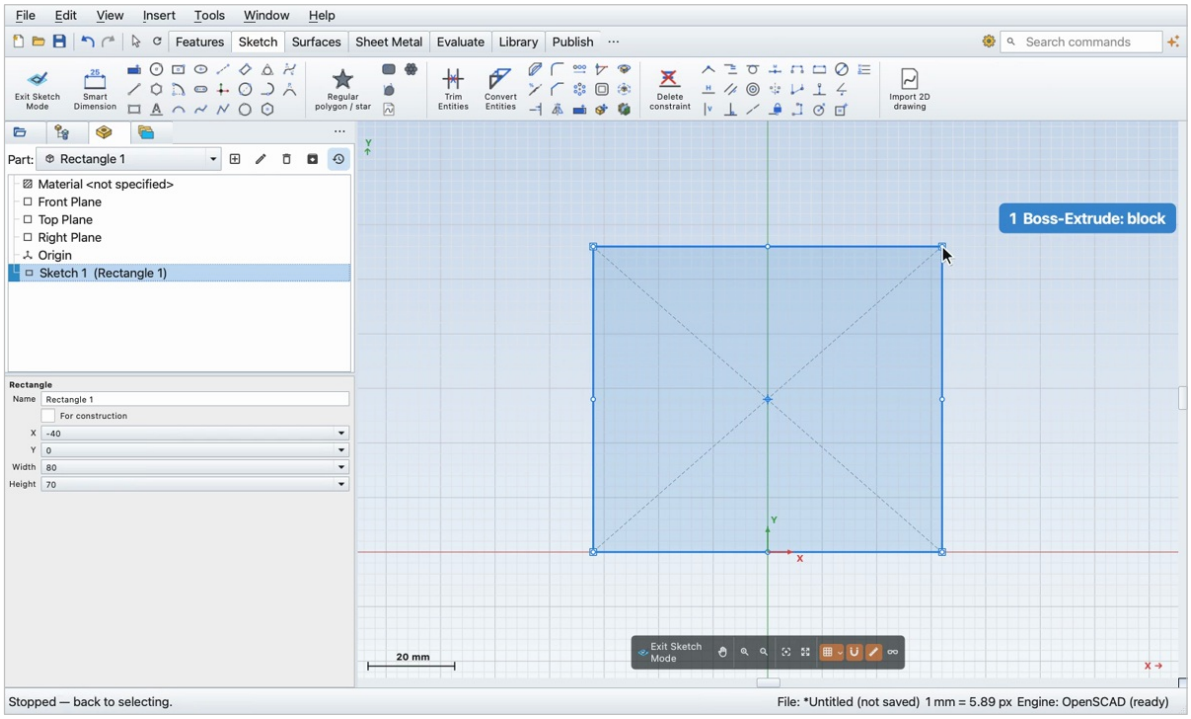

2. Smart Dimension: eighty, and seventy.

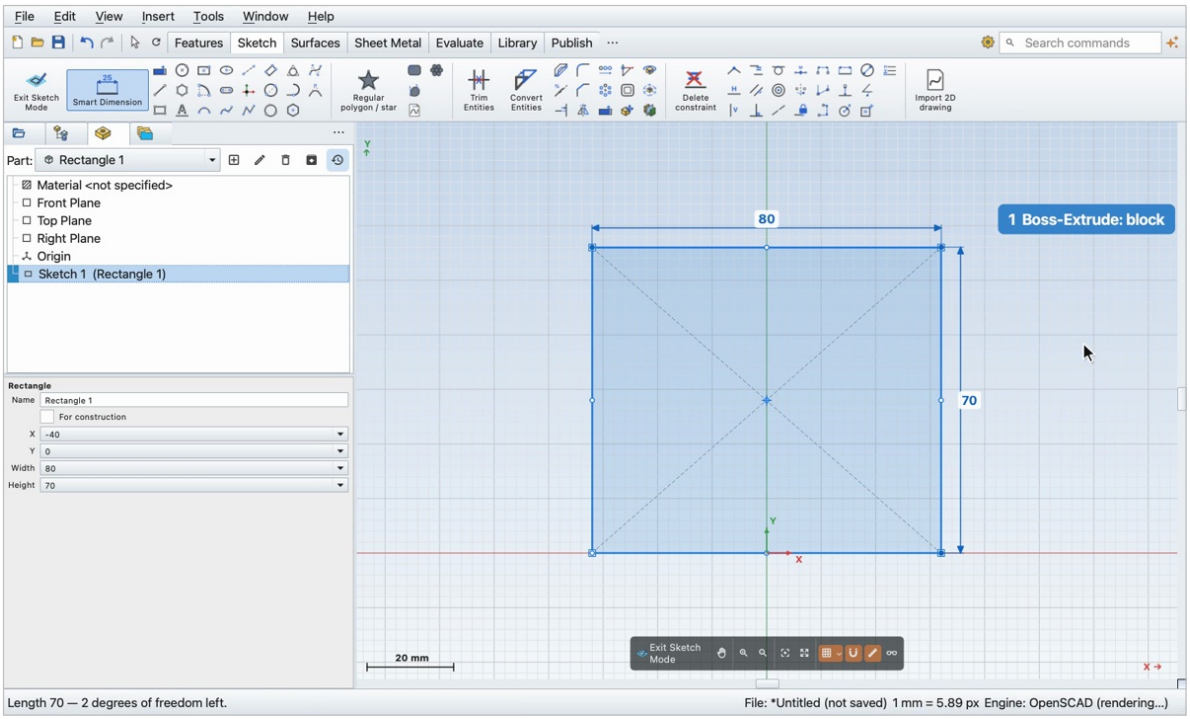

3. Extruded Boss: click the rectangle, twenty, OK.

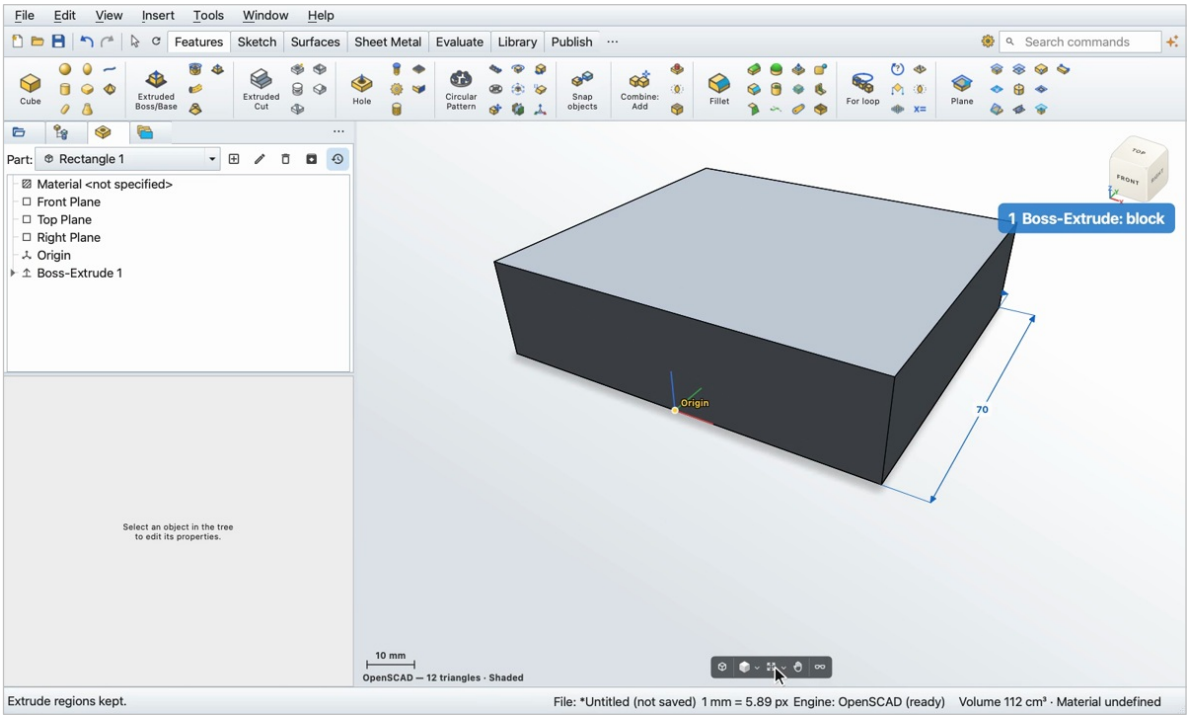

Step 2

The upright at the back: ten thick. Its sides run from the ends of the block up to touch a circle sixty across, whose centre is sixty above the block.

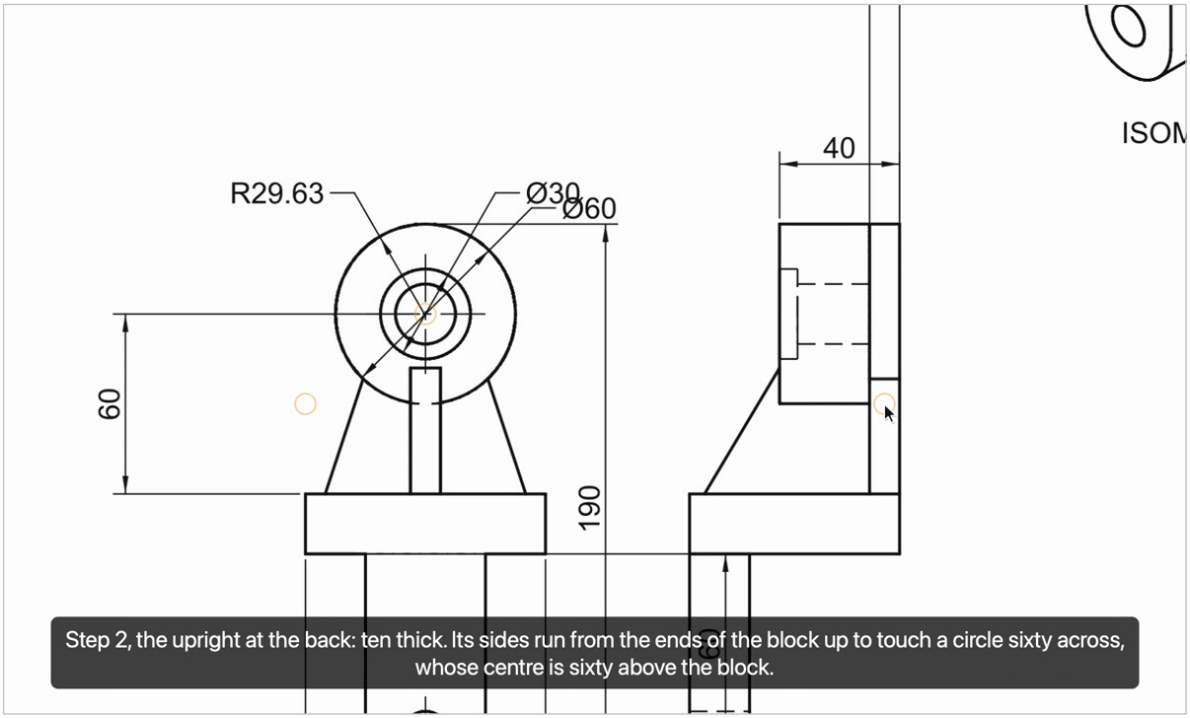

1. Turn to the back, Sketch, and click the back face of the block.

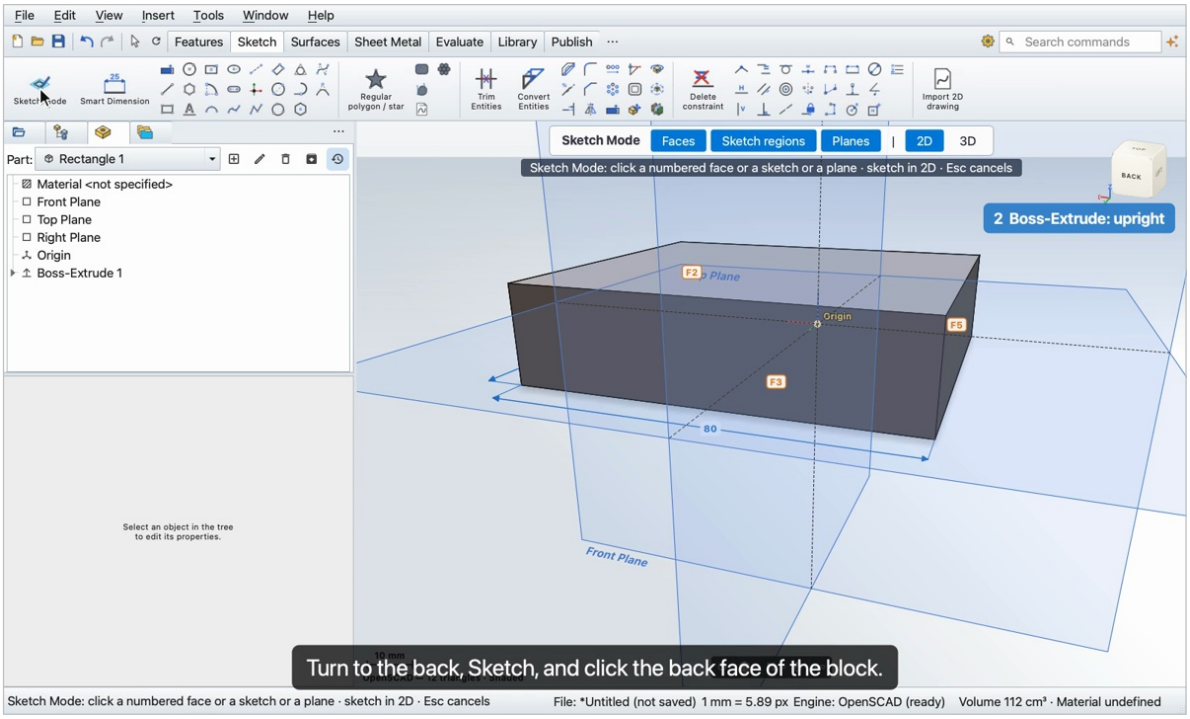

2. Sketch regions off, so the click takes the face.

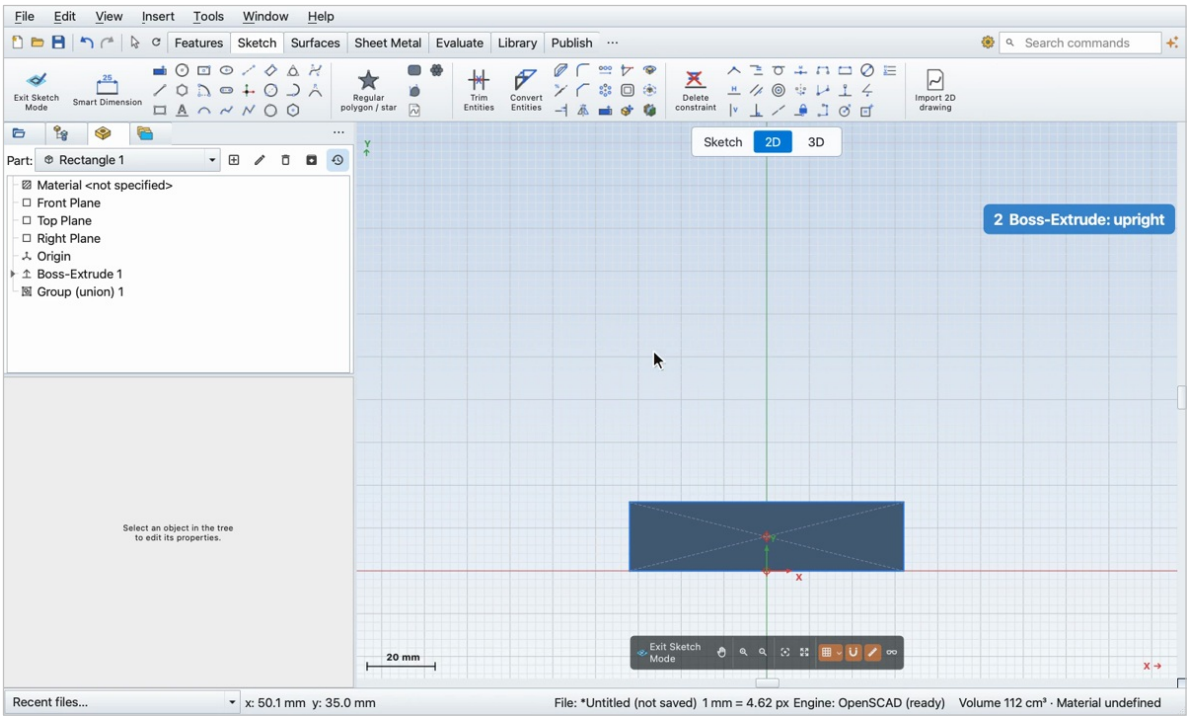

3. A circle sixty across, its centre sixty above the block.

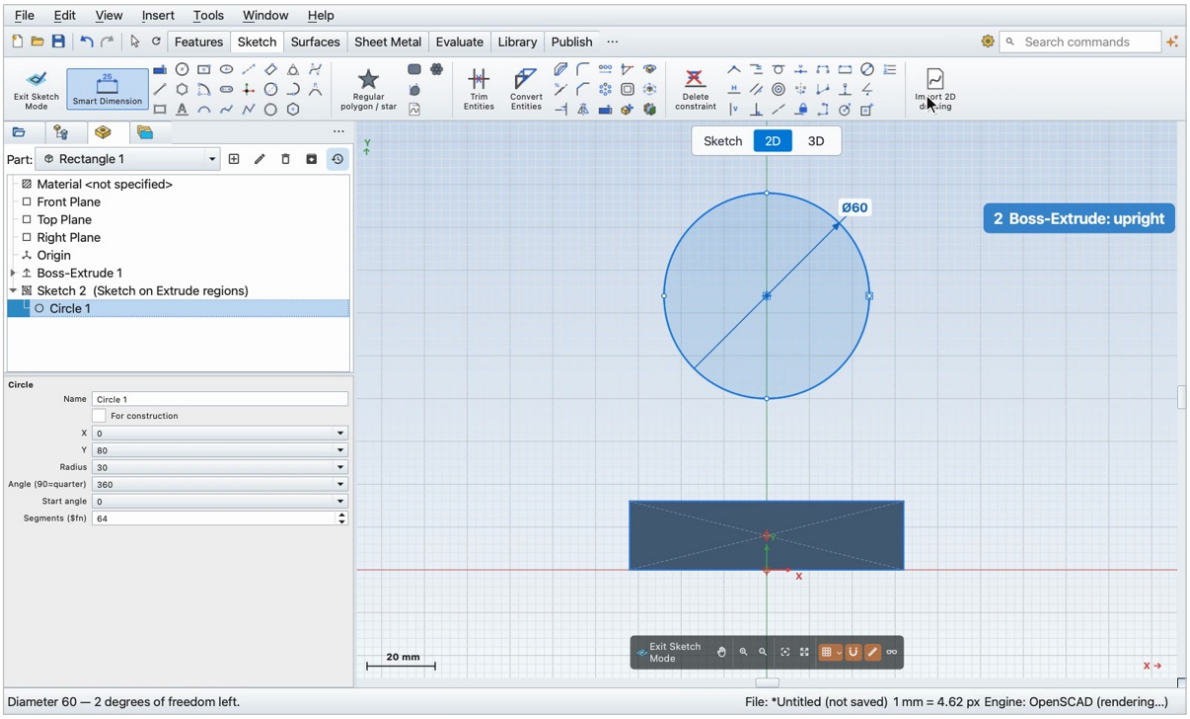

4. Line tool: from each end of the block's edge up to touch the circle, and one along the bottom.

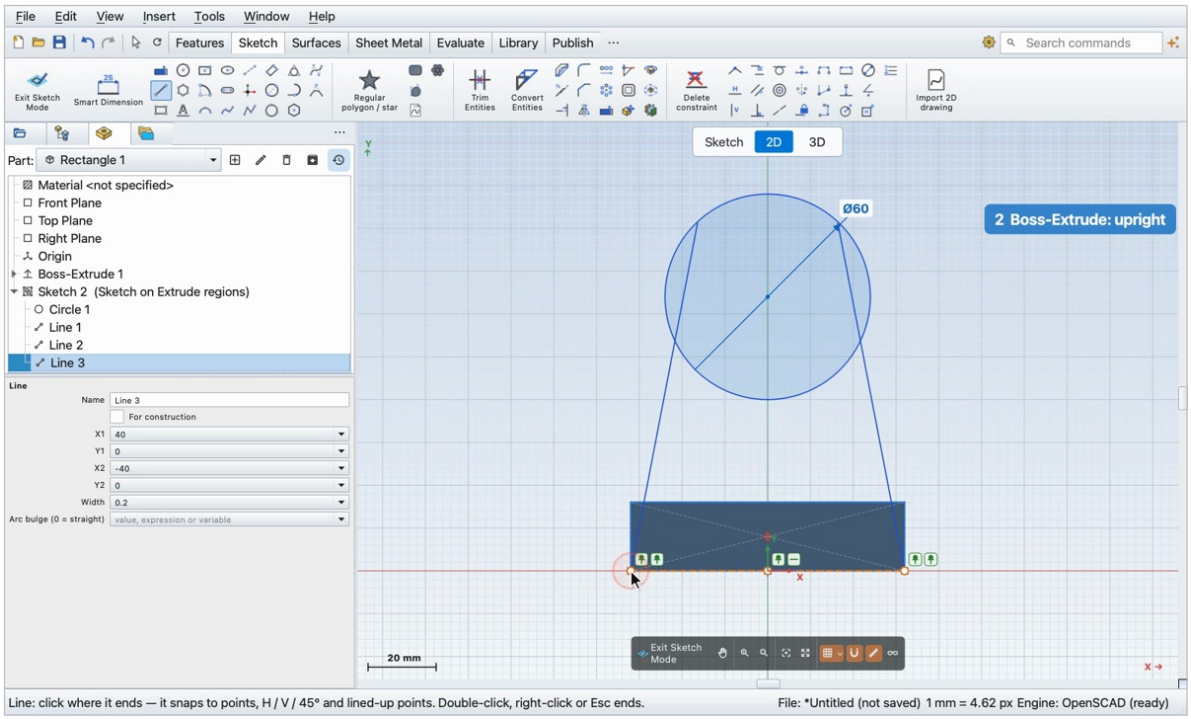

5. Extruded Boss: the area under the circle and the circle. Ten, Reverse, OK.

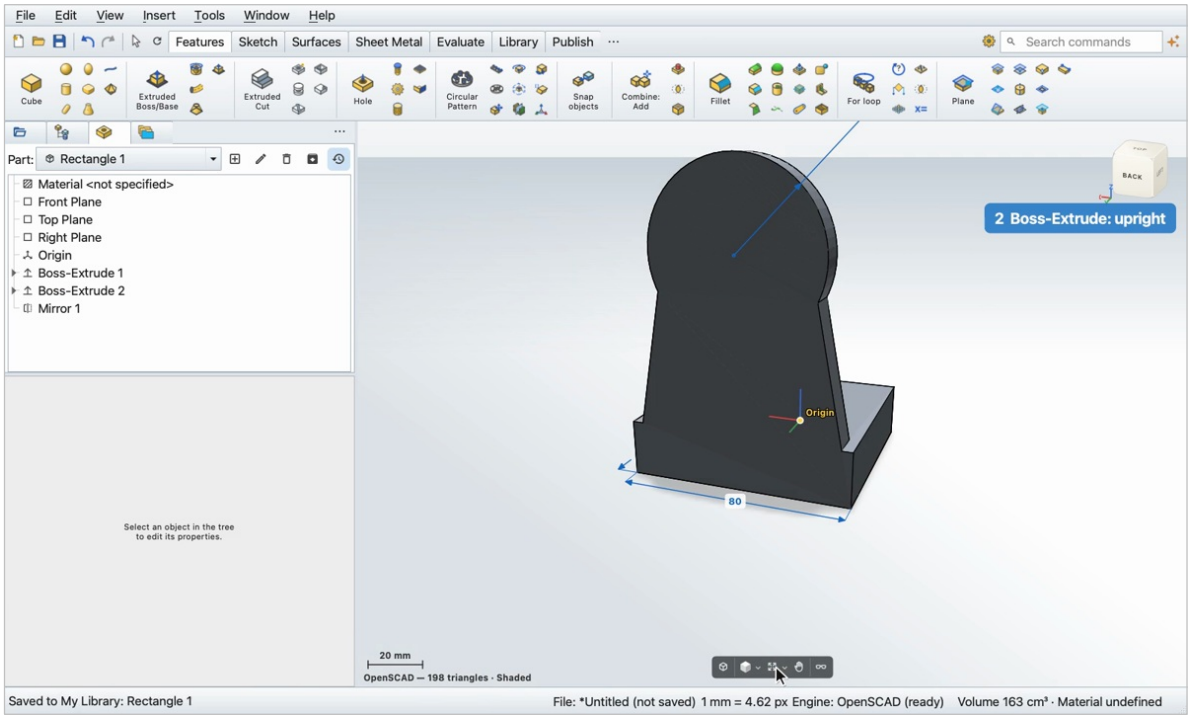

Step 3

The boss: sixty across, forty long in all, so thirty in front of the upright.

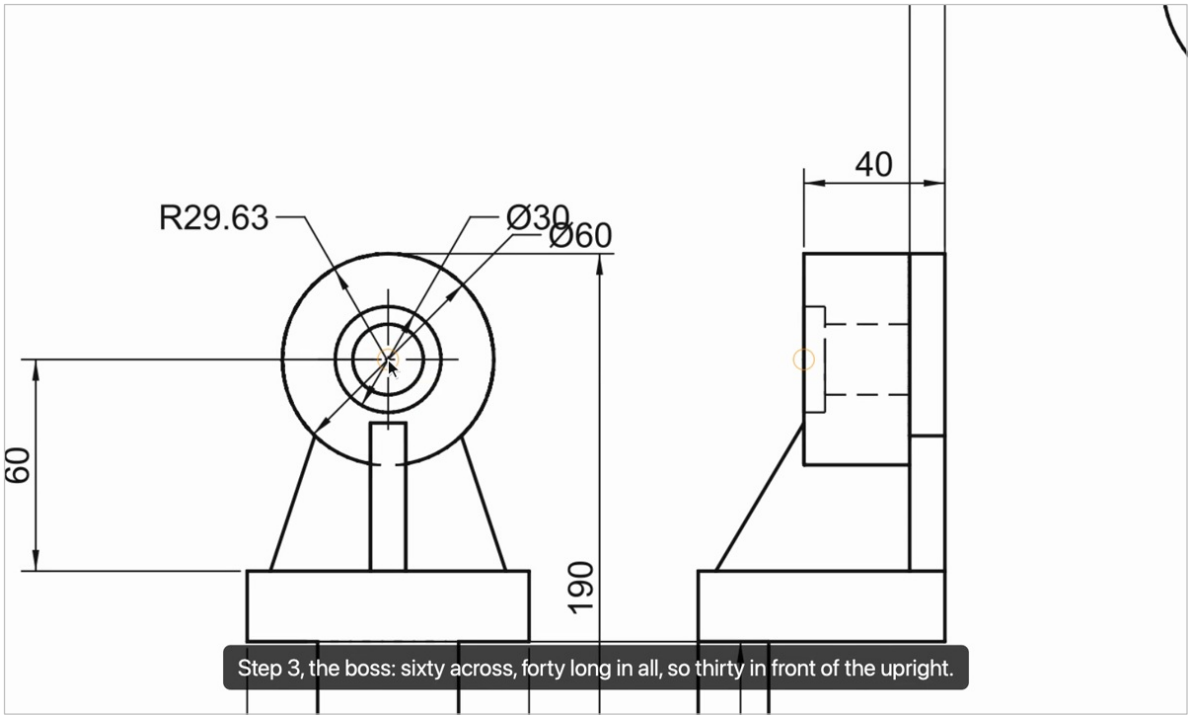

1. Back to the front, Sketch on the front face of the upright, a circle sixty across.

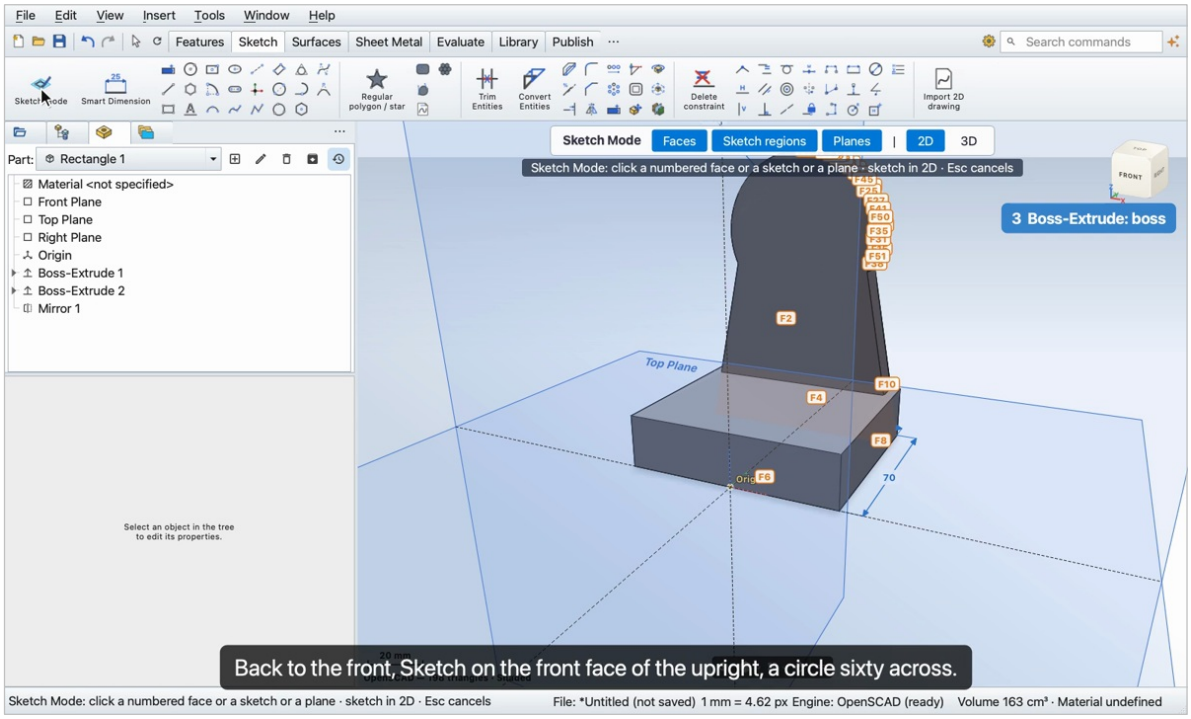

2. Sketch regions off, so the click takes the face.

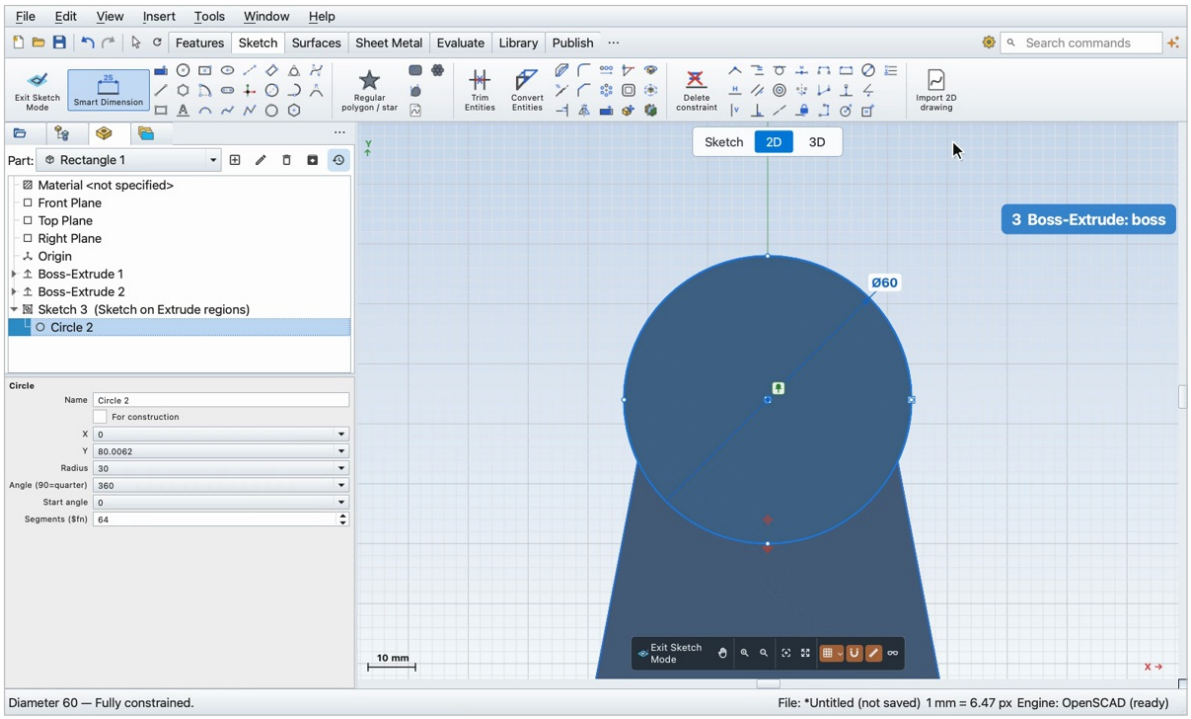

3. Extruded Boss: the circle, thirty, OK.

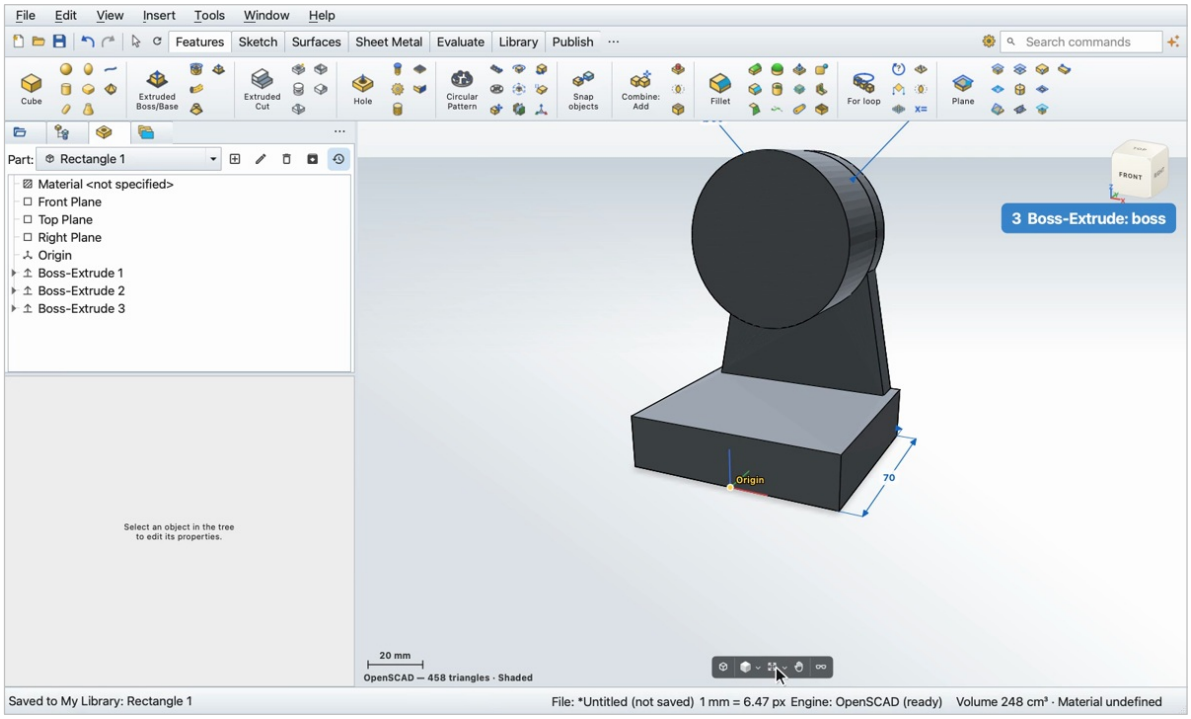

Step 4

The bore: twenty across right through, counterbored thirty across and six deep on both sides.

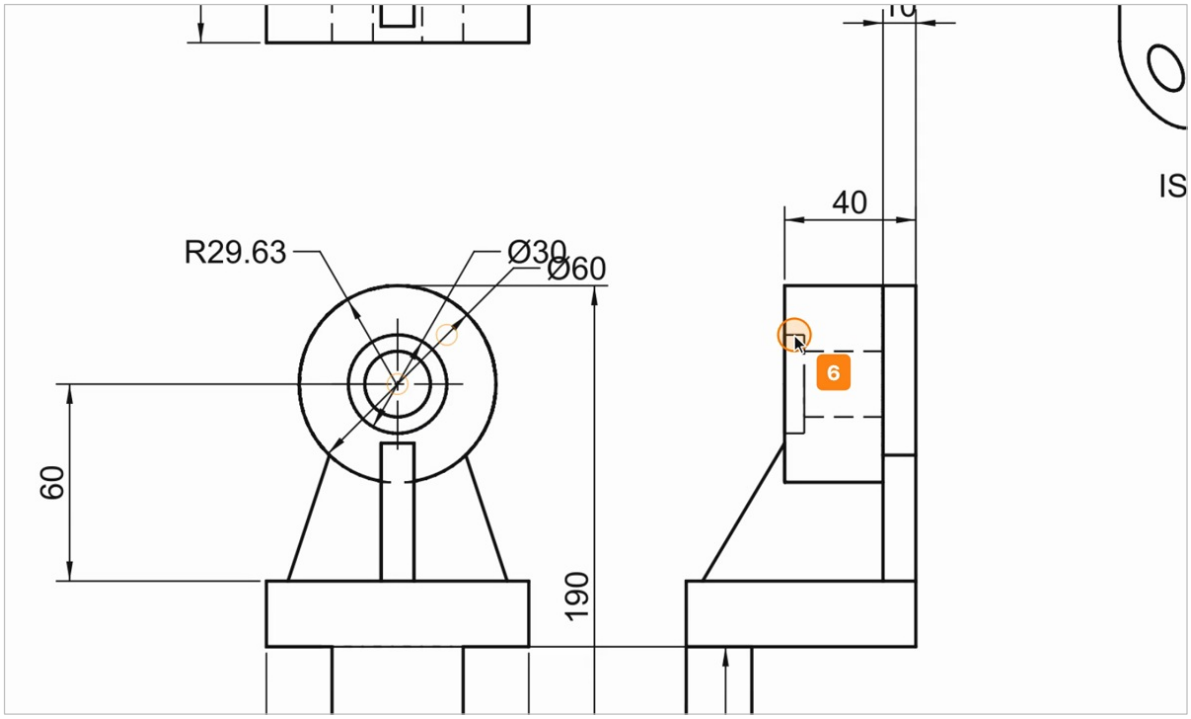

1. Sketch on the front of the boss: a circle thirty across.

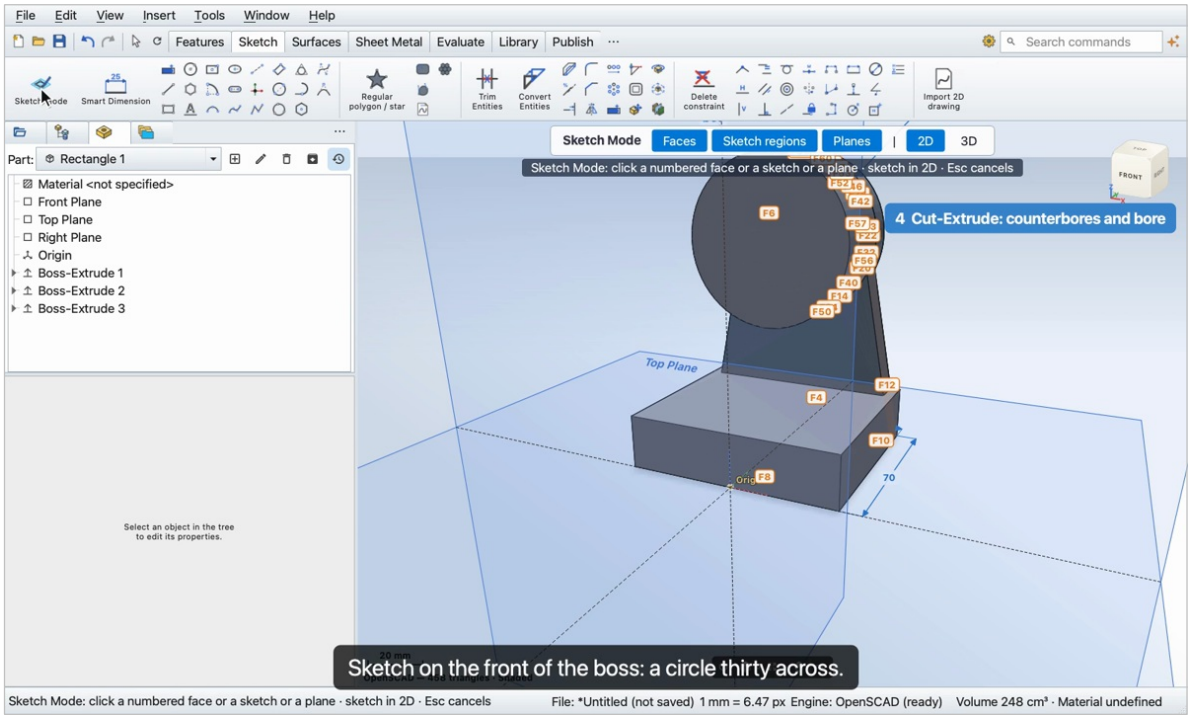

2. Sketch regions off, so the click takes the face.

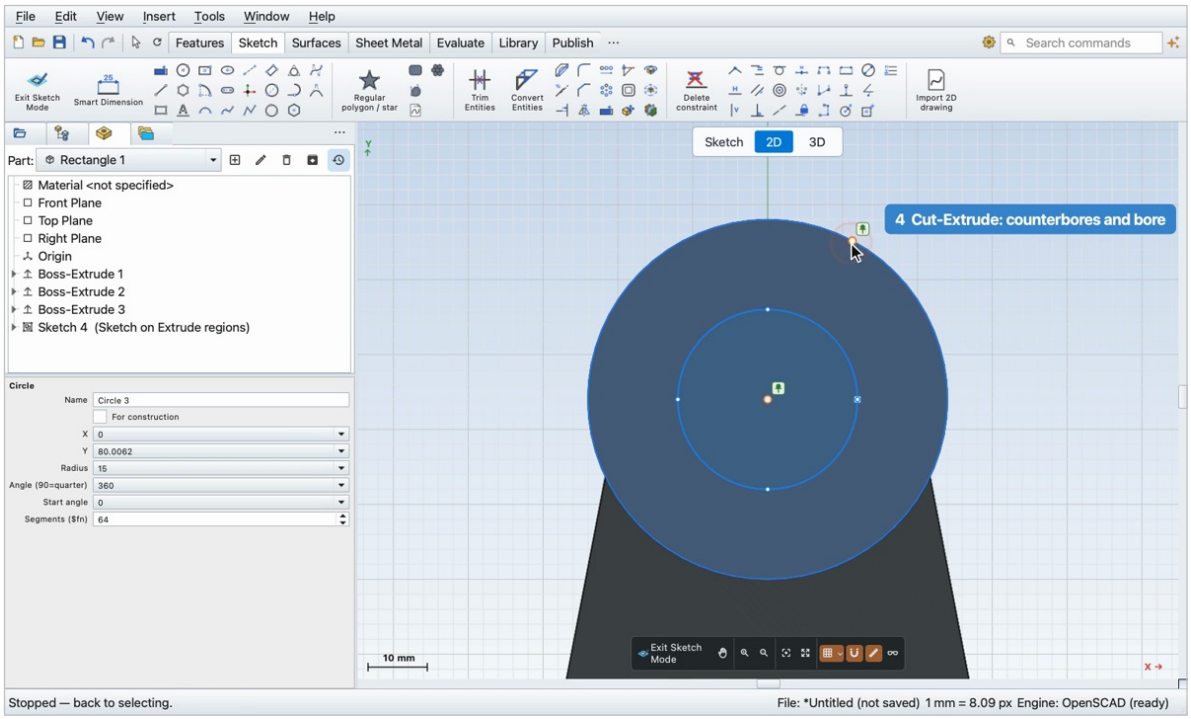

3. Extruded Cut: the circle, six deep, OK.

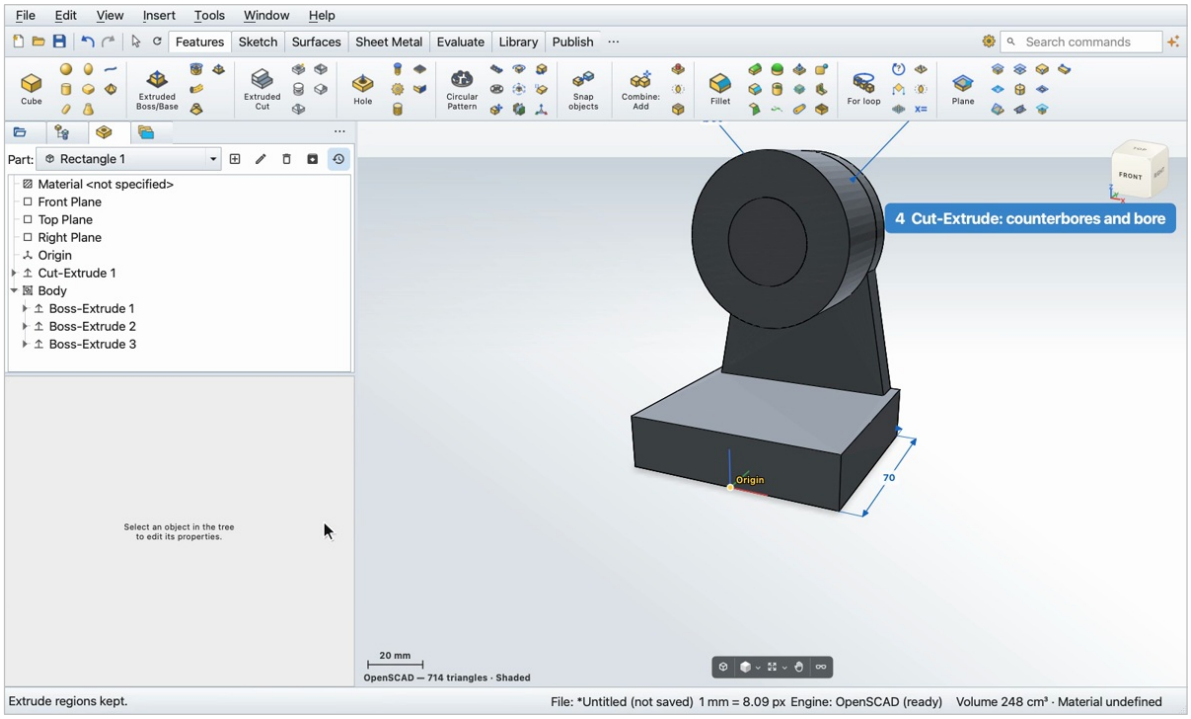

4. The same at the back: turn round, Sketch on the back face, a circle thirty across, cut six, Reverse so it goes in.

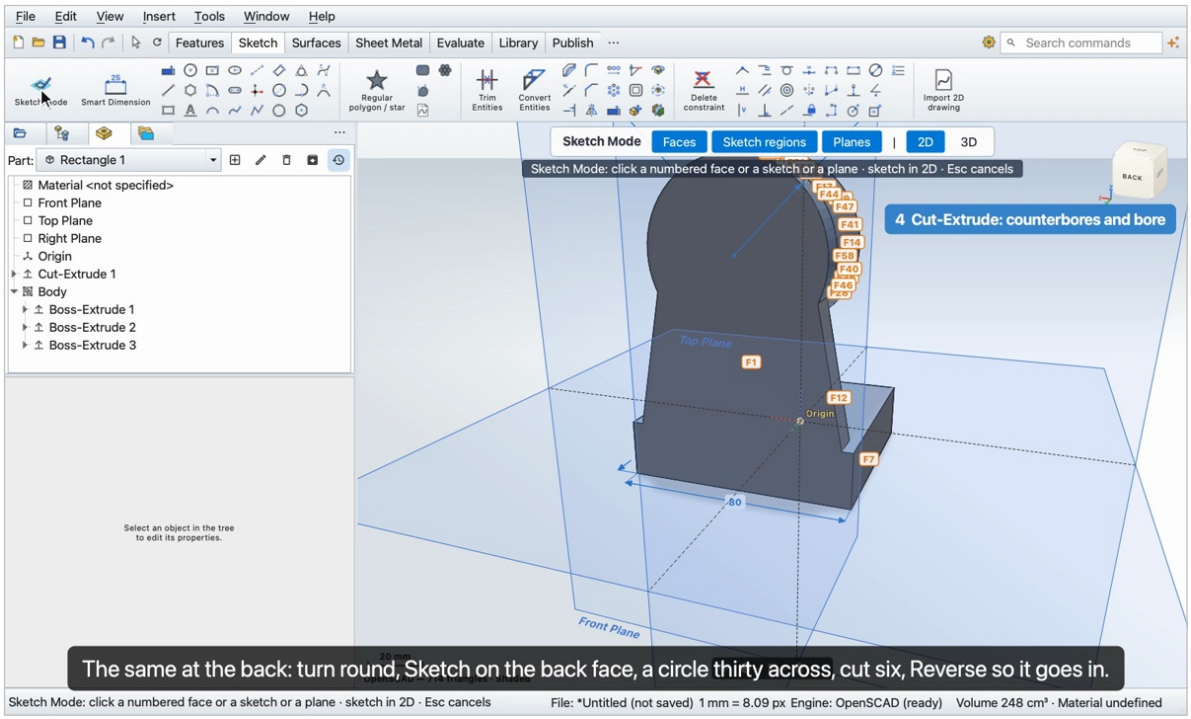

5. Sketch regions off, so the click takes the face.

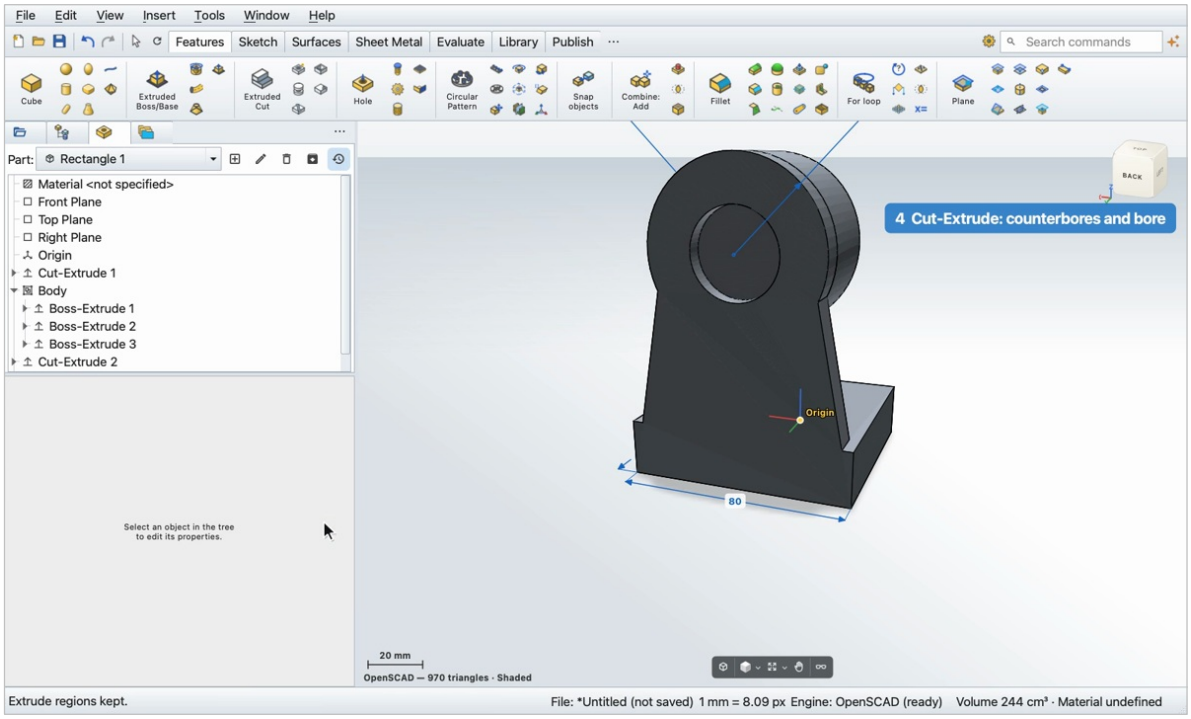

6. Then the bore: Sketch on the front again, a circle twenty across, Through All.

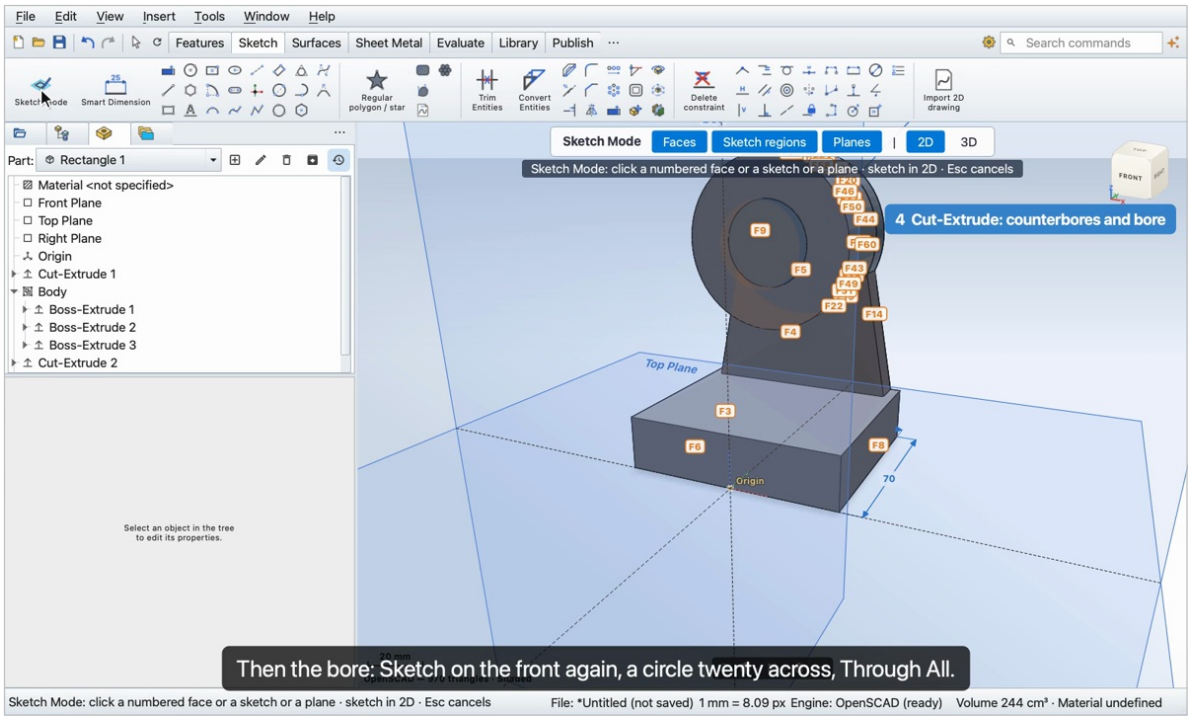

7. Sketch regions off, so the click takes the face.

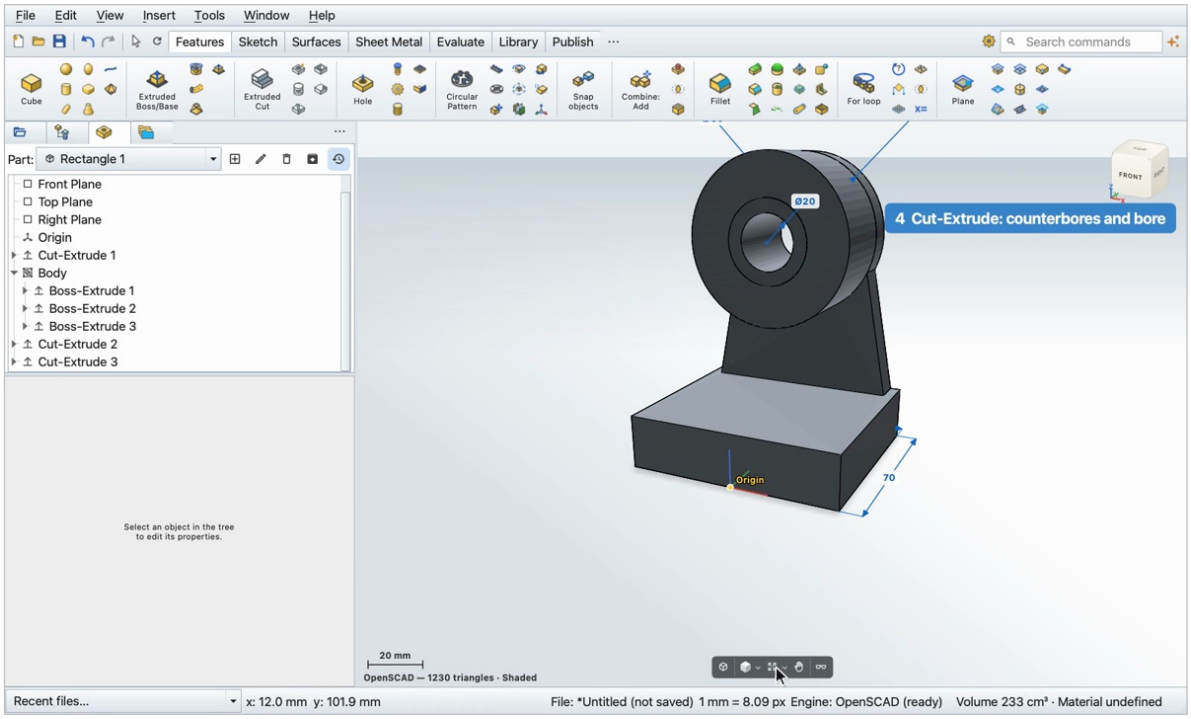

Step 5

The lug under the front: forty wide, sixty down to a round end of radius twenty, twenty thick, with a hole fifteen across.

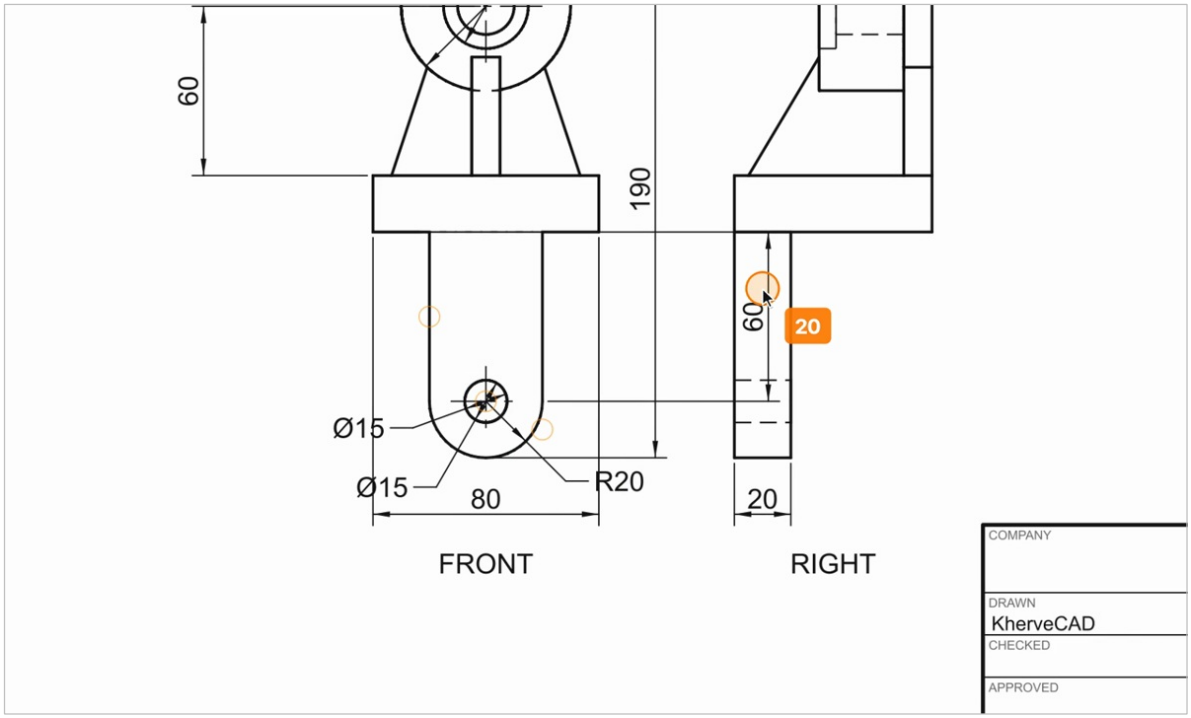

1. Sketch on the front face of the block: a rectangle forty wide going sixty down, and a circle radius twenty at its foot.

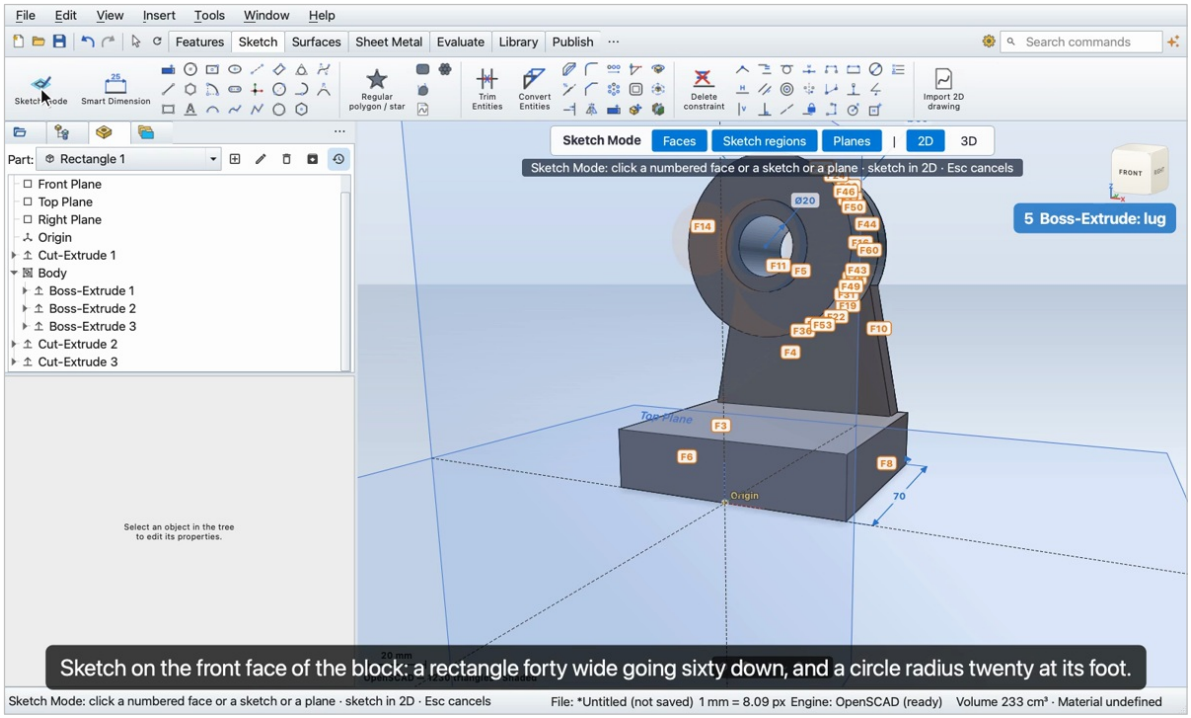

2. Sketch regions off, so the click takes the face.

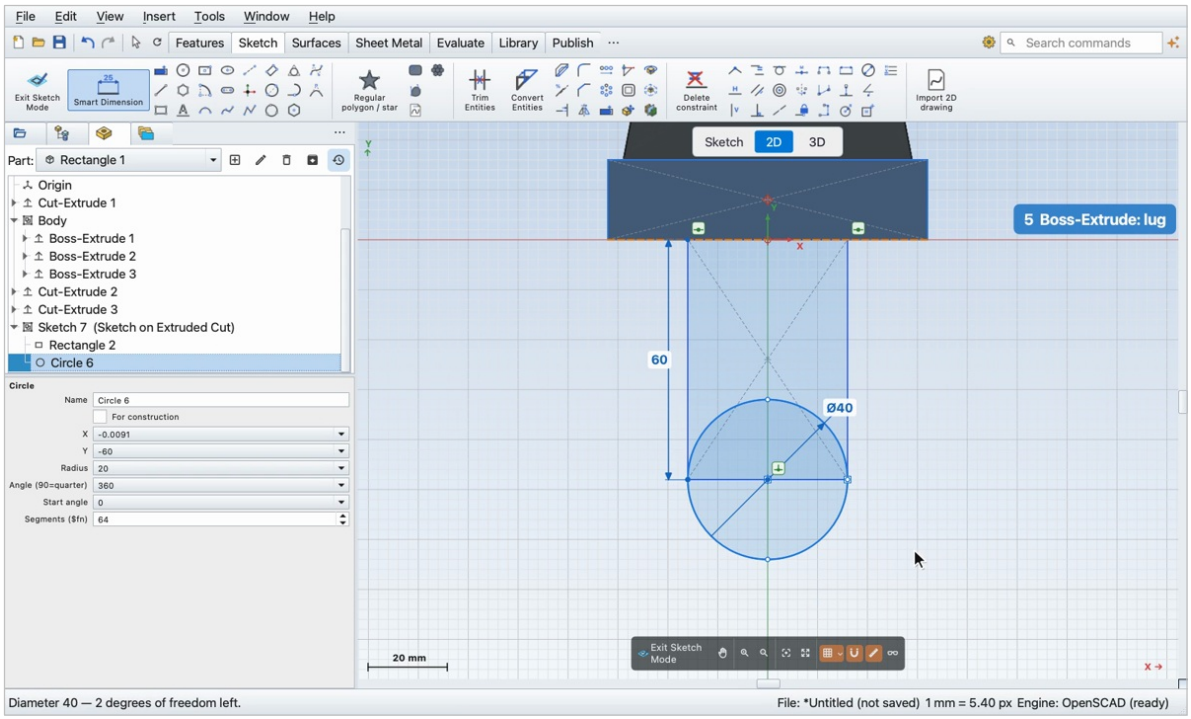

3. Extruded Boss: the three areas, twenty, Reverse so it runs under the block, OK.

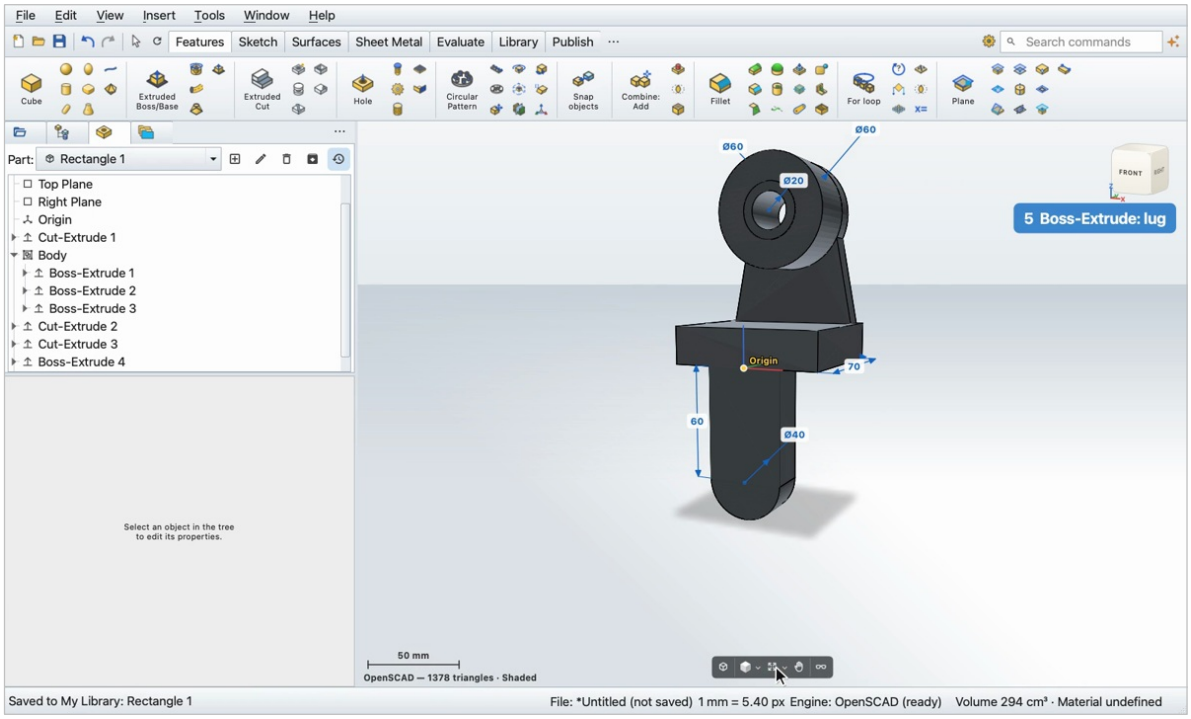

4. Sketch on the lug's front, a circle fifteen across at the centre of the round end; cut Through All.

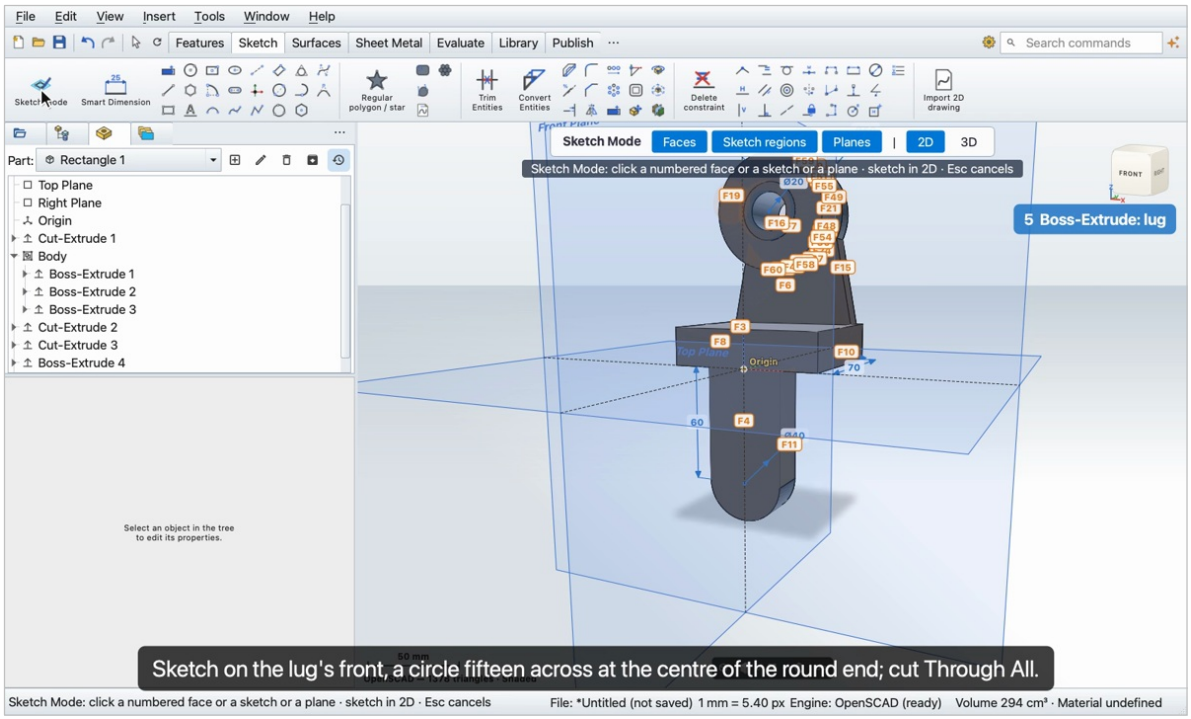

5. Sketch regions off, so the click takes the face.

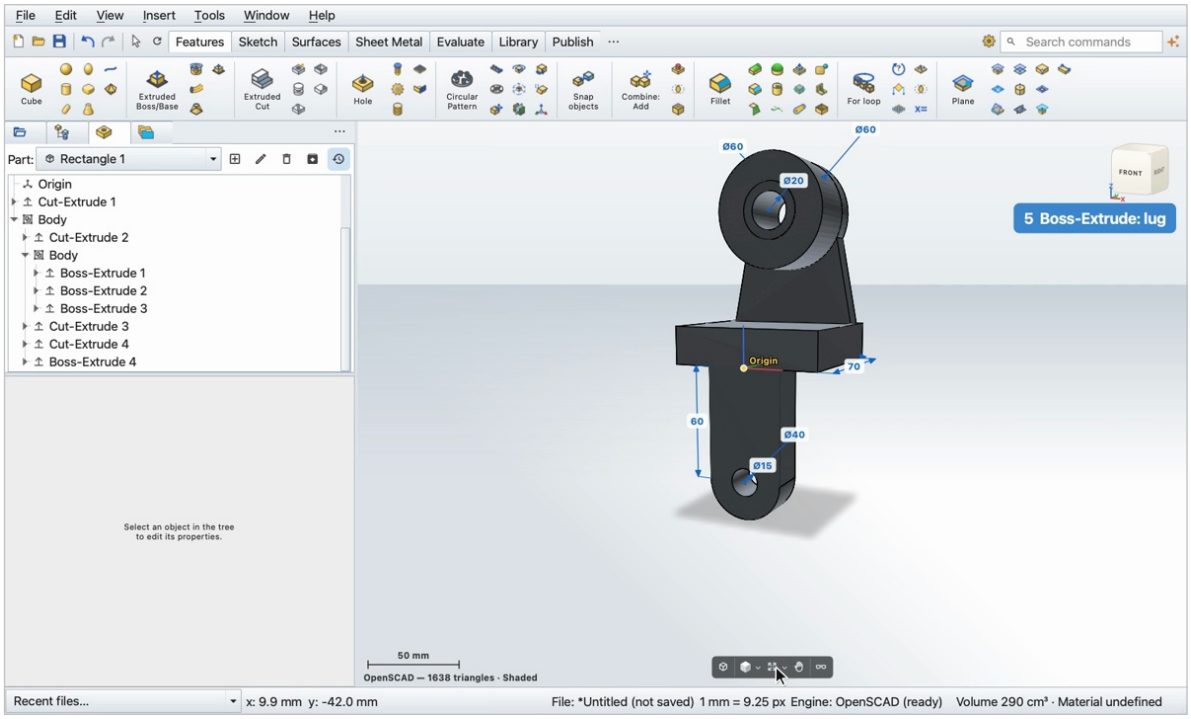

Step 6

The rib: ten thick, from the front of the block up to the boss.

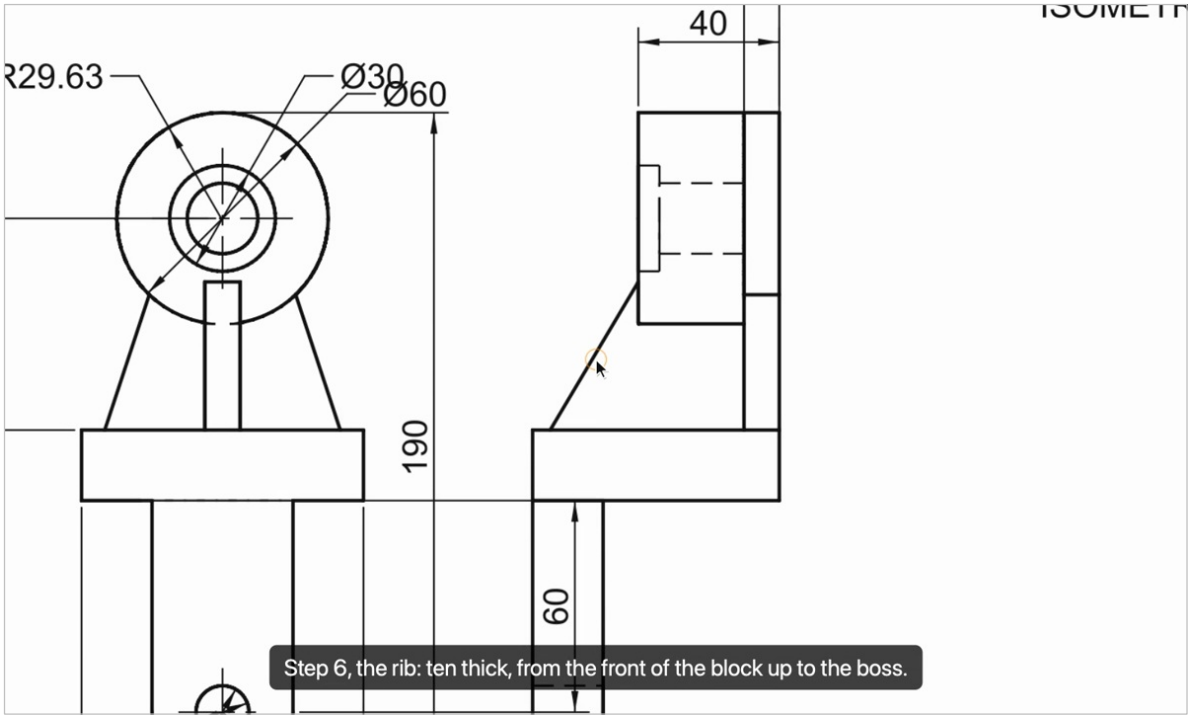

1. Click the Right Plane, Sketch, and one line from the top of the block up to the boss.

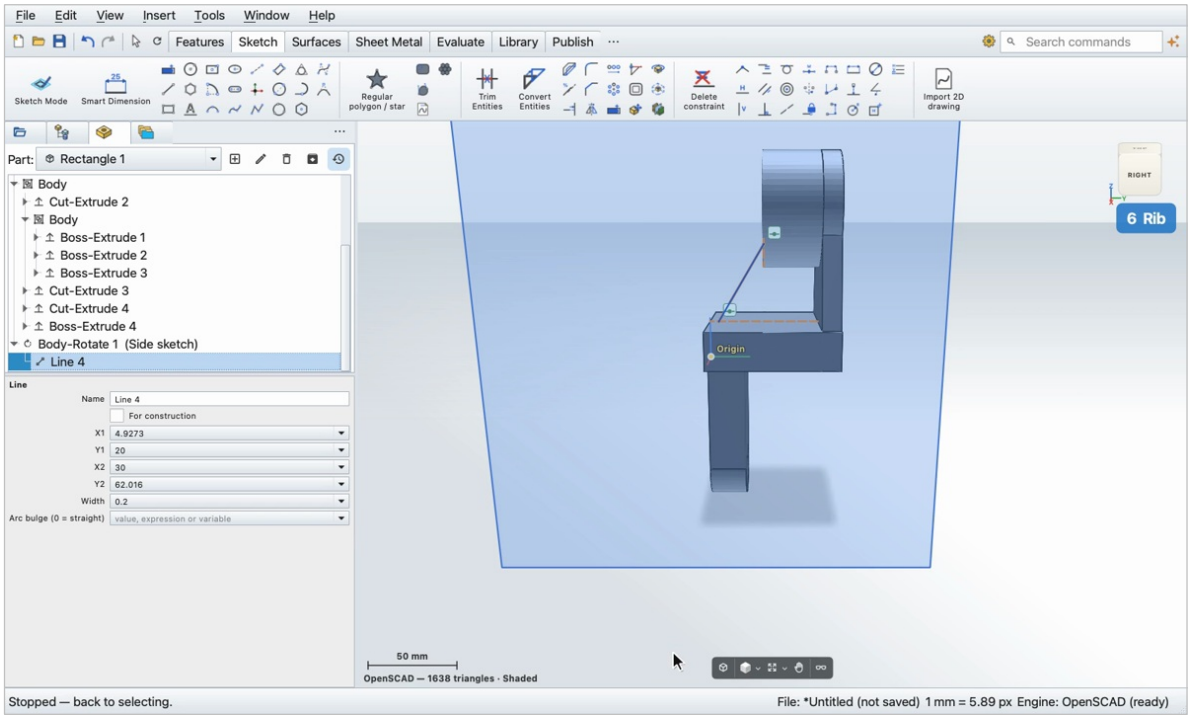

2. Click the sketch in the tree, then Rib: ten thick, both sides.

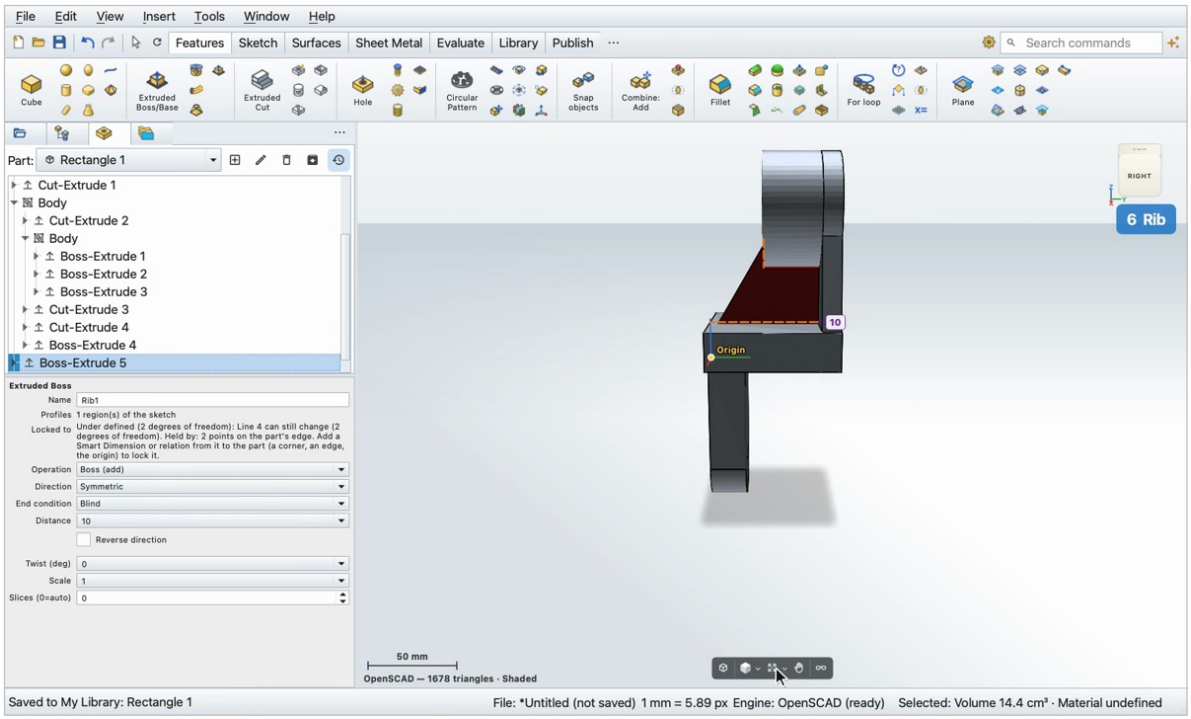

3. The pivot bracket is done: eighty by seventy, one hundred and ninety high.

