Bearing support

Built in KherveCAD with the mouse, step by step, as in the video youtube.com/watch?v=QzogjQ32POI. Each numbered line is one action; its picture shows the screen once it is done (the button used is outlined, the pointer shows where to click).

The drawing

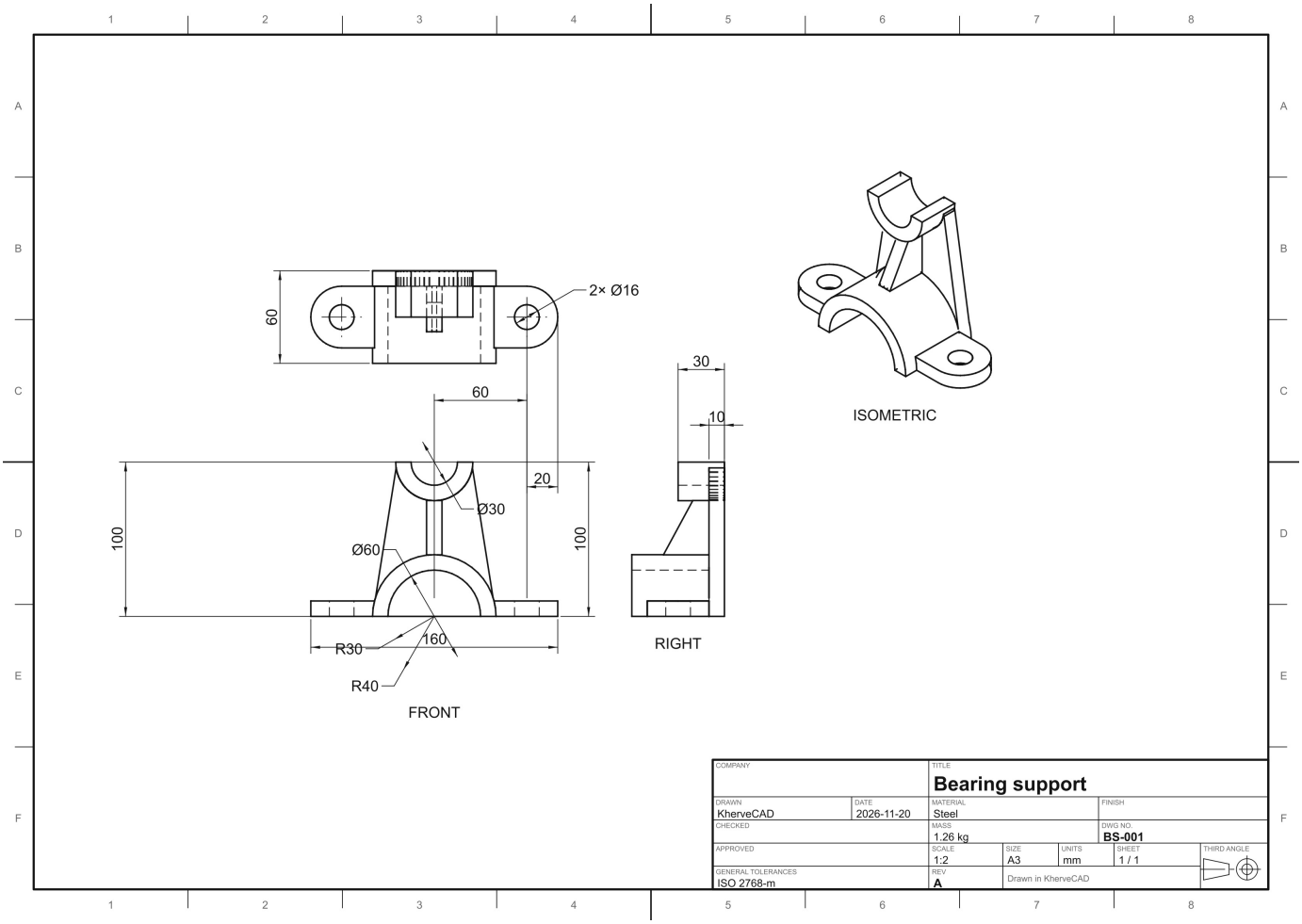

The part

This is the part we will make: a bearing support. A half ring cradle, a smaller half ring above it joined by a wall, two lugs with holes, and a rib.

Bearing support

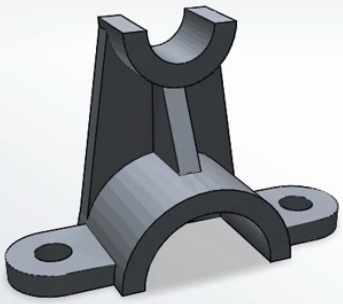

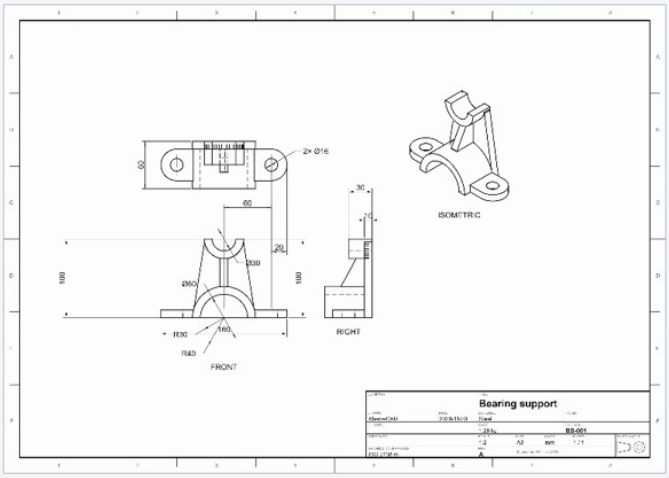

This is the part we will make: a bearing support. A half ring cradle, a smaller half ring above it joined by a wall, two lugs with holes, and a rib.

Step 1

The half ring: eighty across outside, sixty inside, sixty long.

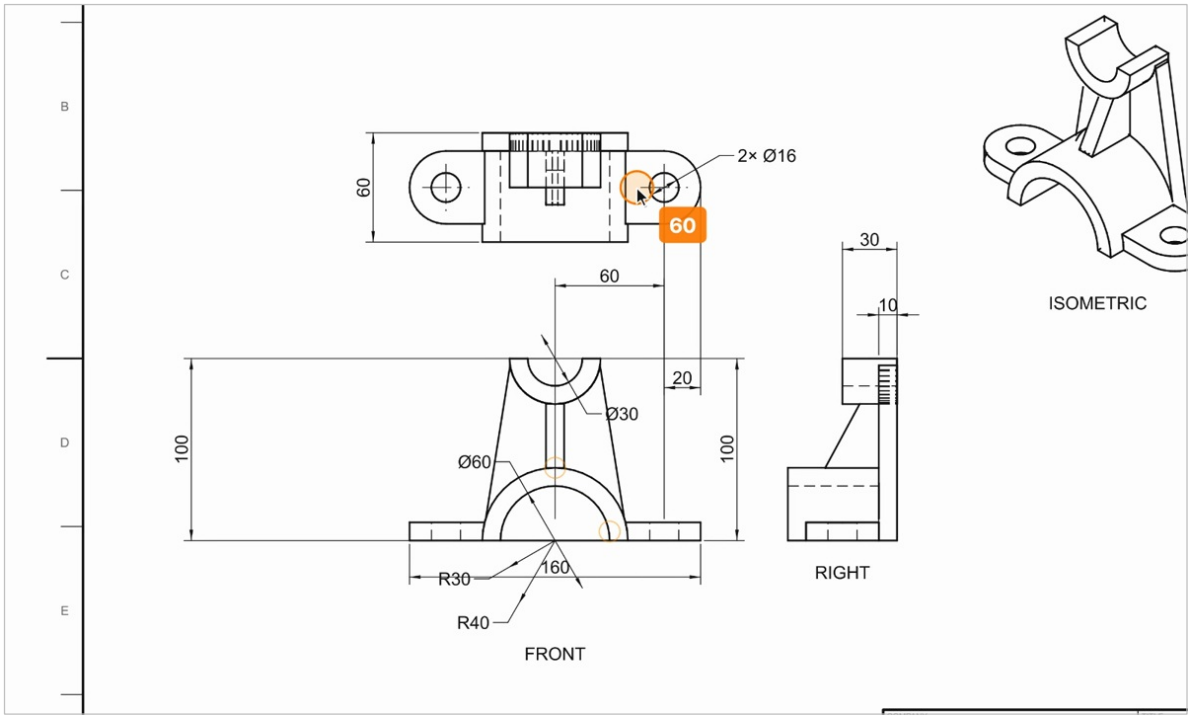

1. Click the Front Plane, then Sketch: two circles at the origin and a line across them.

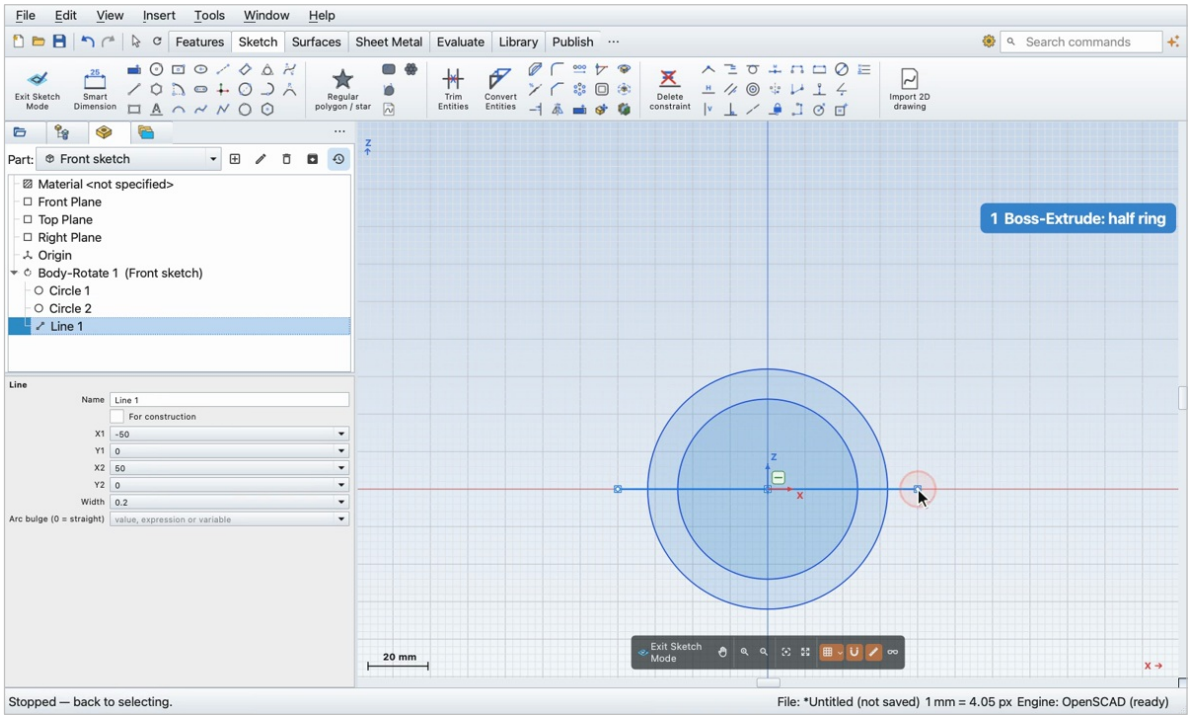

2. Smart Dimension: eighty and sixty.

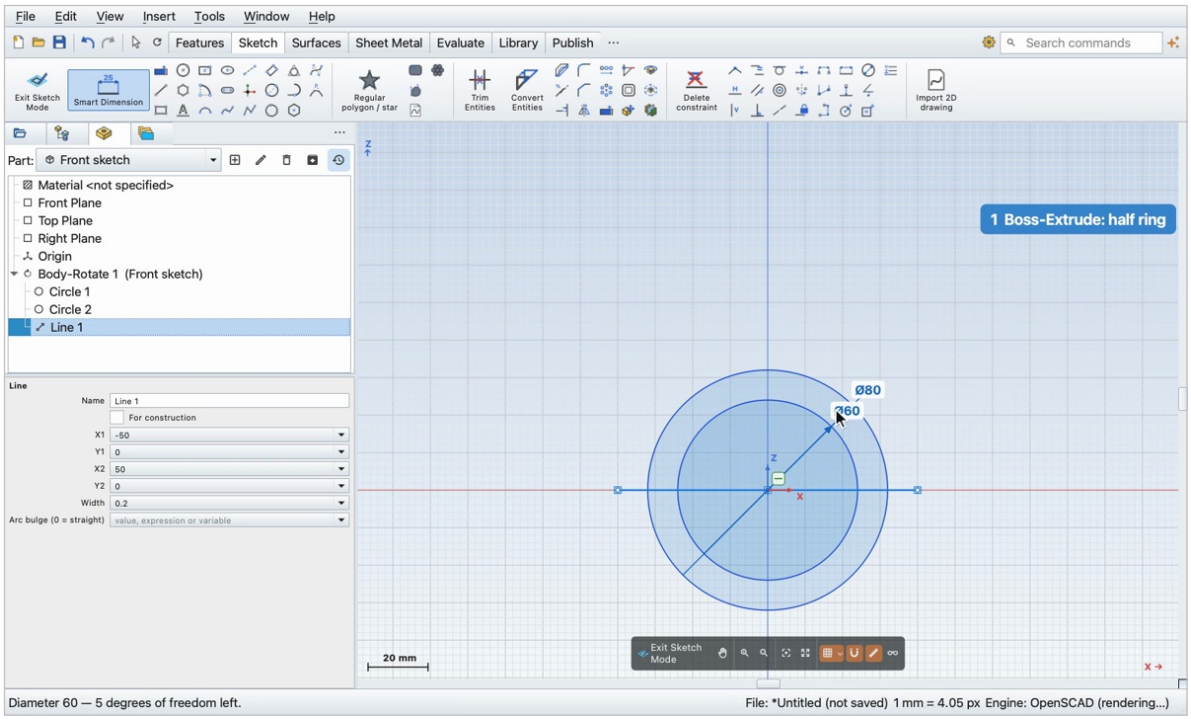

3. Extruded Boss: click the top half of the ring, sixty, OK.

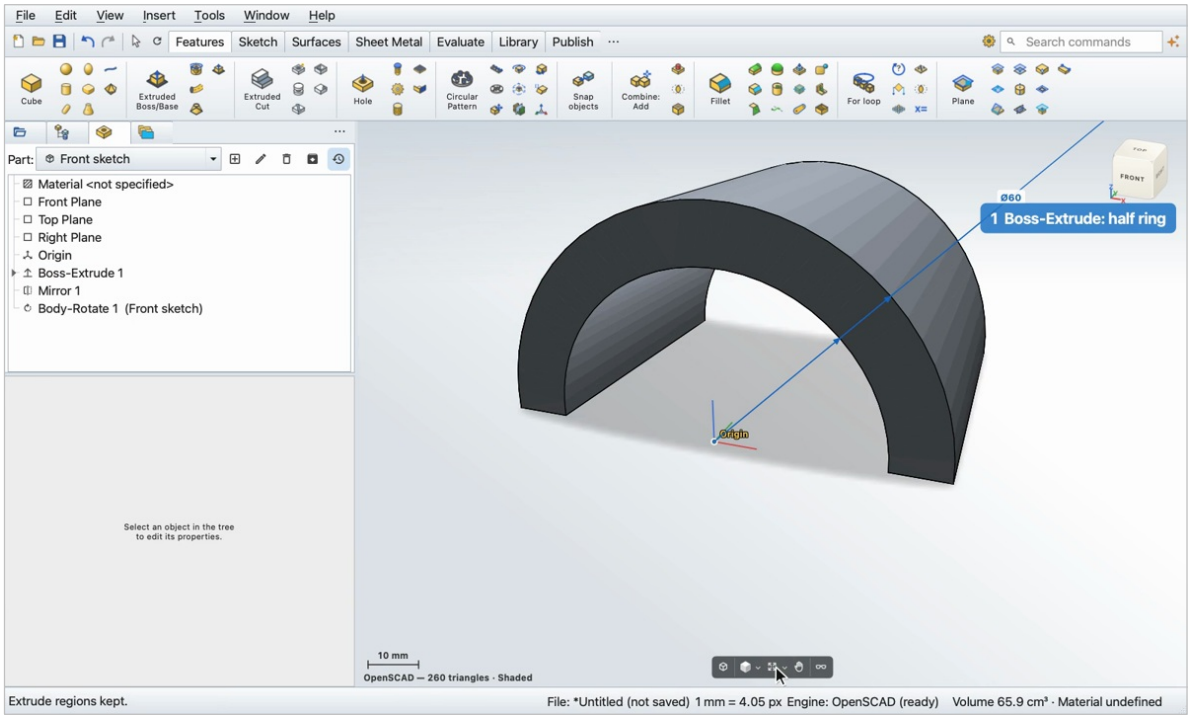

Step 2

The small half ring: fifty across outside, thirty inside, its centre one hundred above; thirty long, starting thirty behind the front.

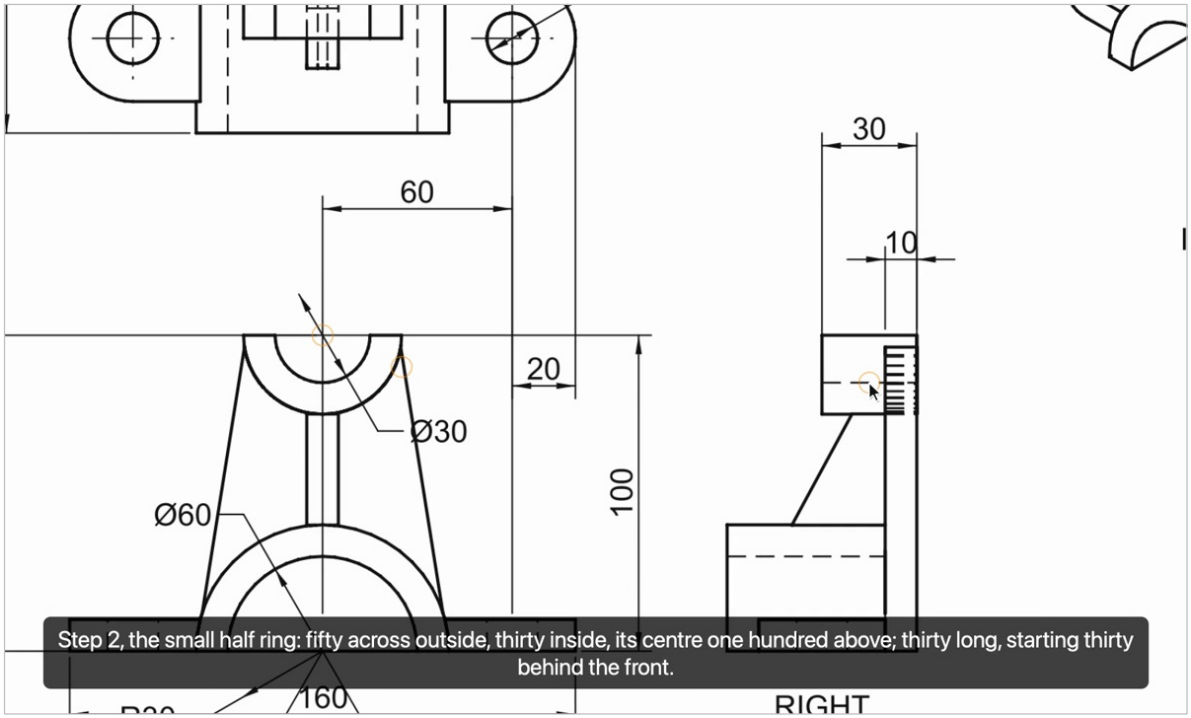

1. Front Plane, Sketch: two circles one hundred above the origin and a line across them.

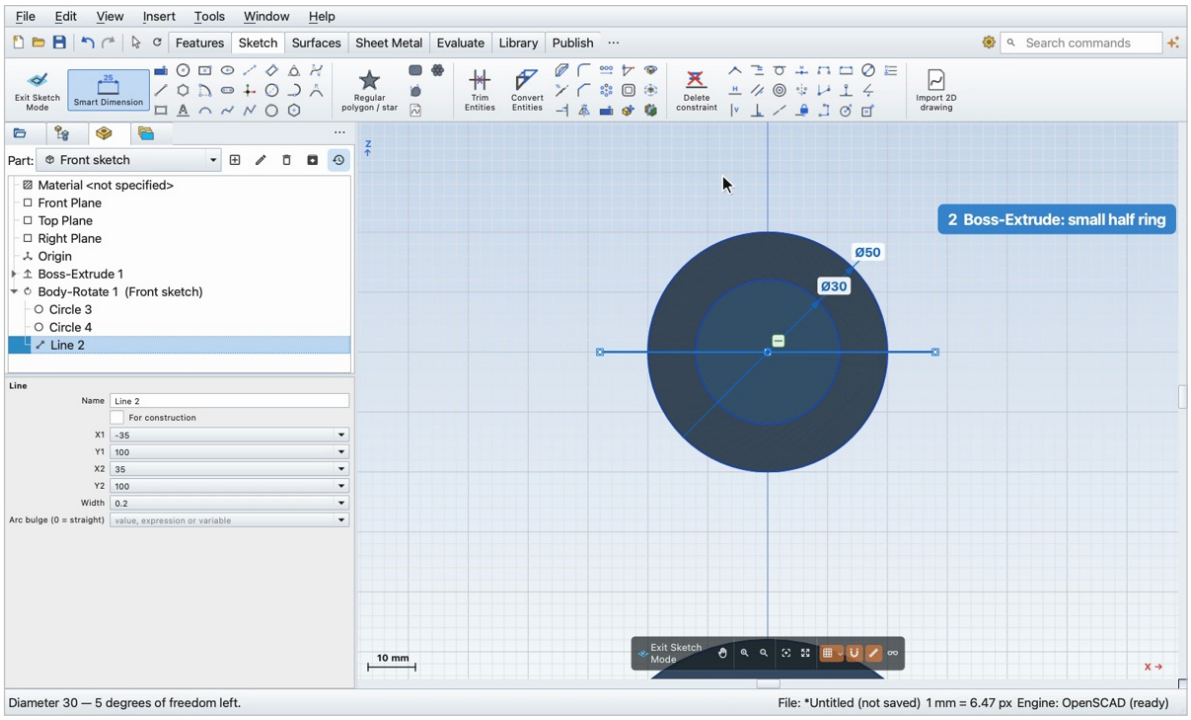

2. Extruded Boss: the lower half of the ring. From Offset thirty, thirty long, OK.

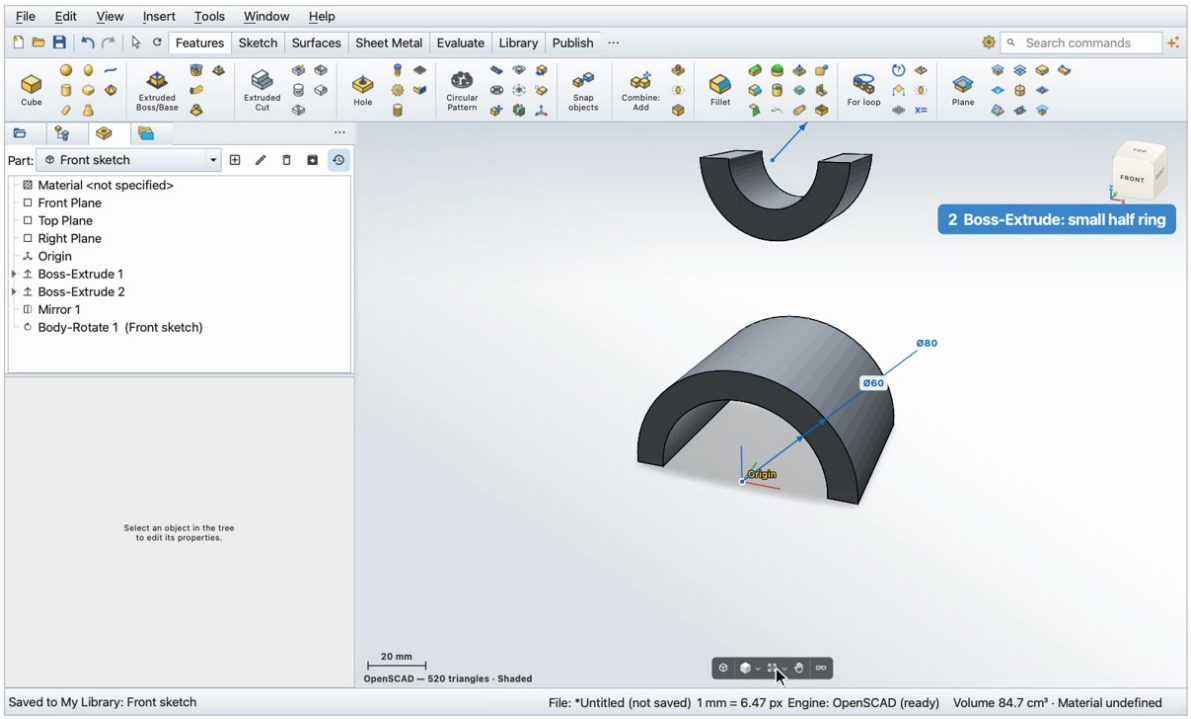

Step 3

The wall at the back, ten thick: from the ends of the big ring, two lines touching the small ring.

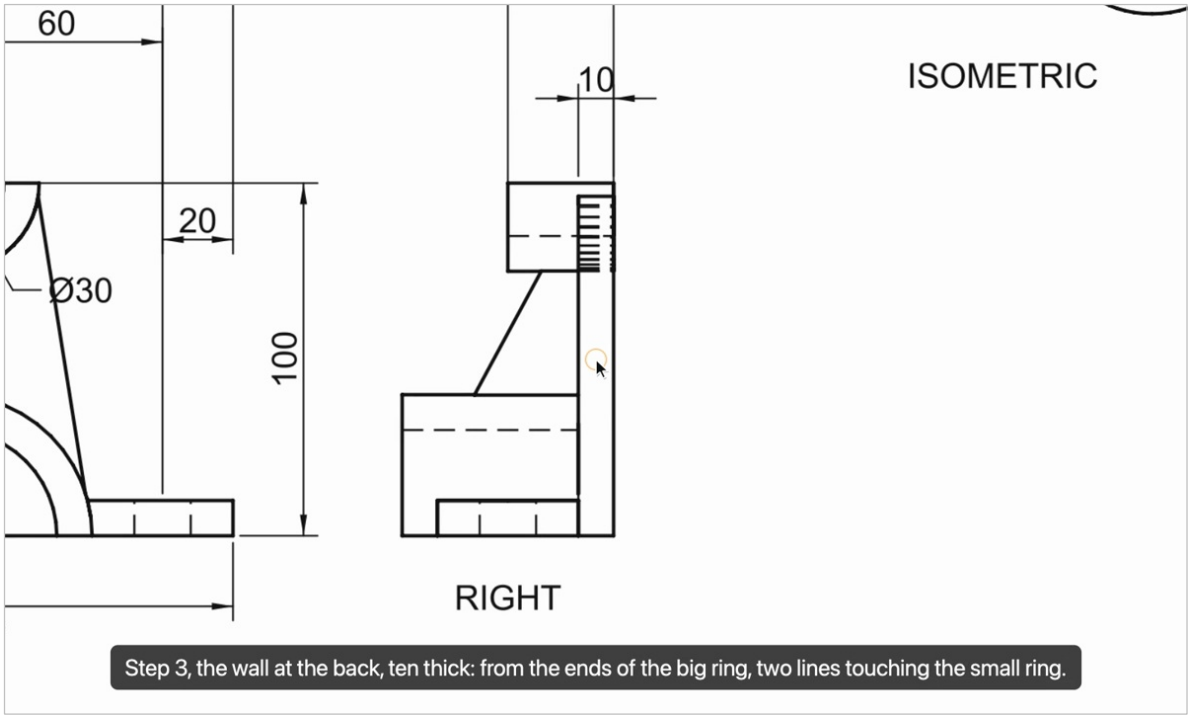

1. Turn to the back, Sketch on the back face of the ring.

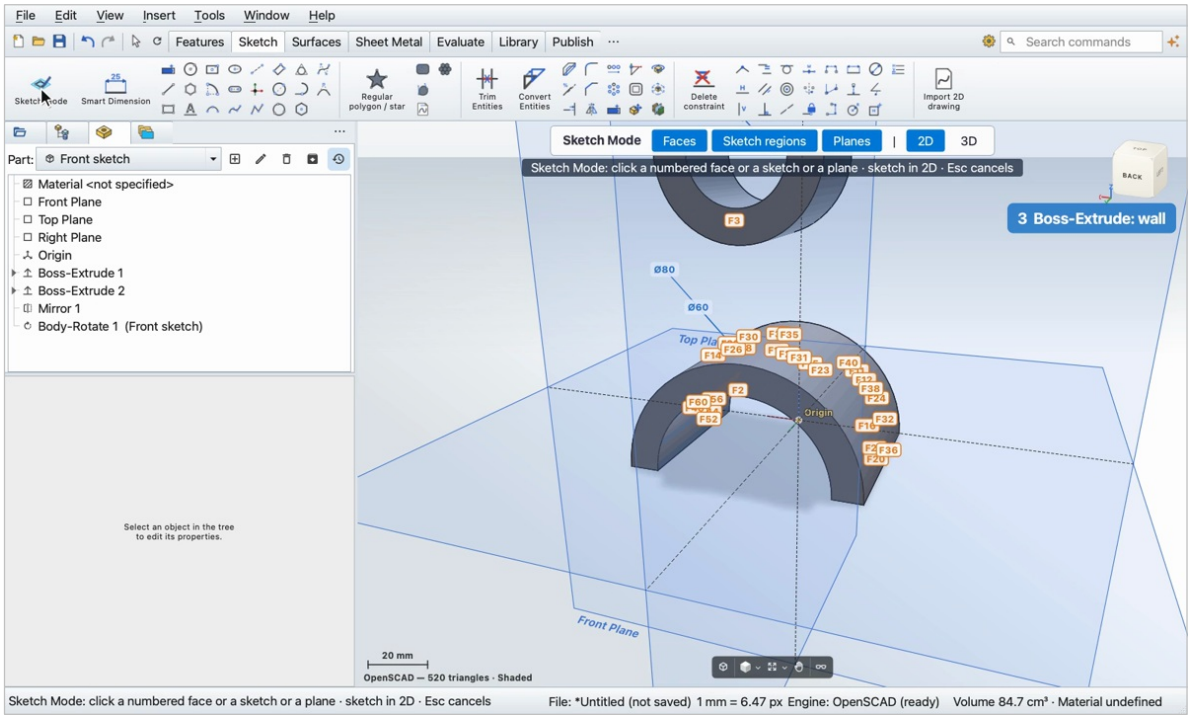

2. Sketch regions off, so the click takes the face.

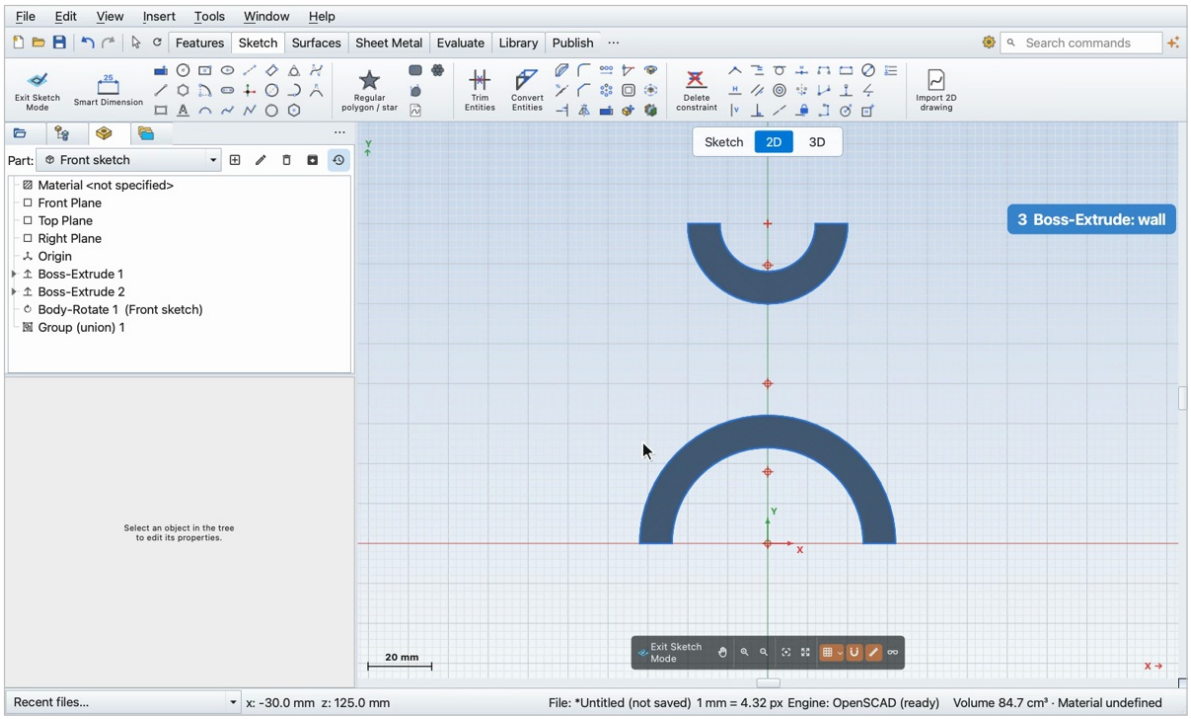

3. A circle fifty across on the small ring, two lines touching it, one along the bottom.

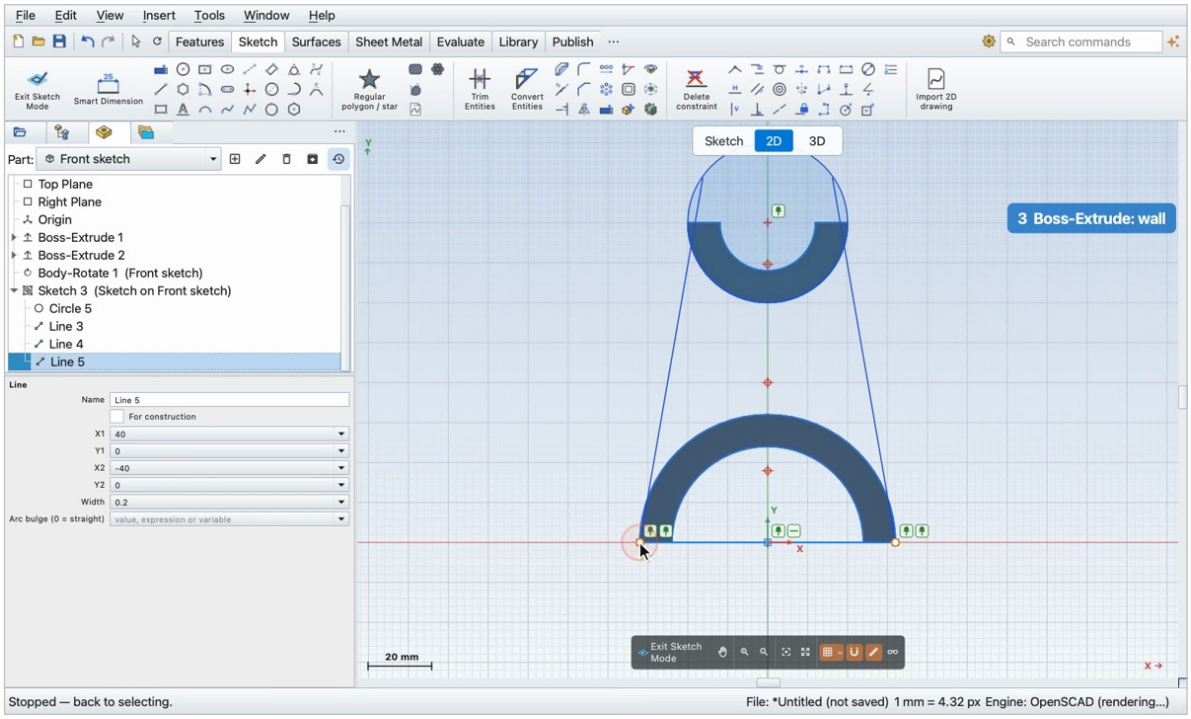

4. Extruded Boss: the area between the lines, ten, Reverse, OK.

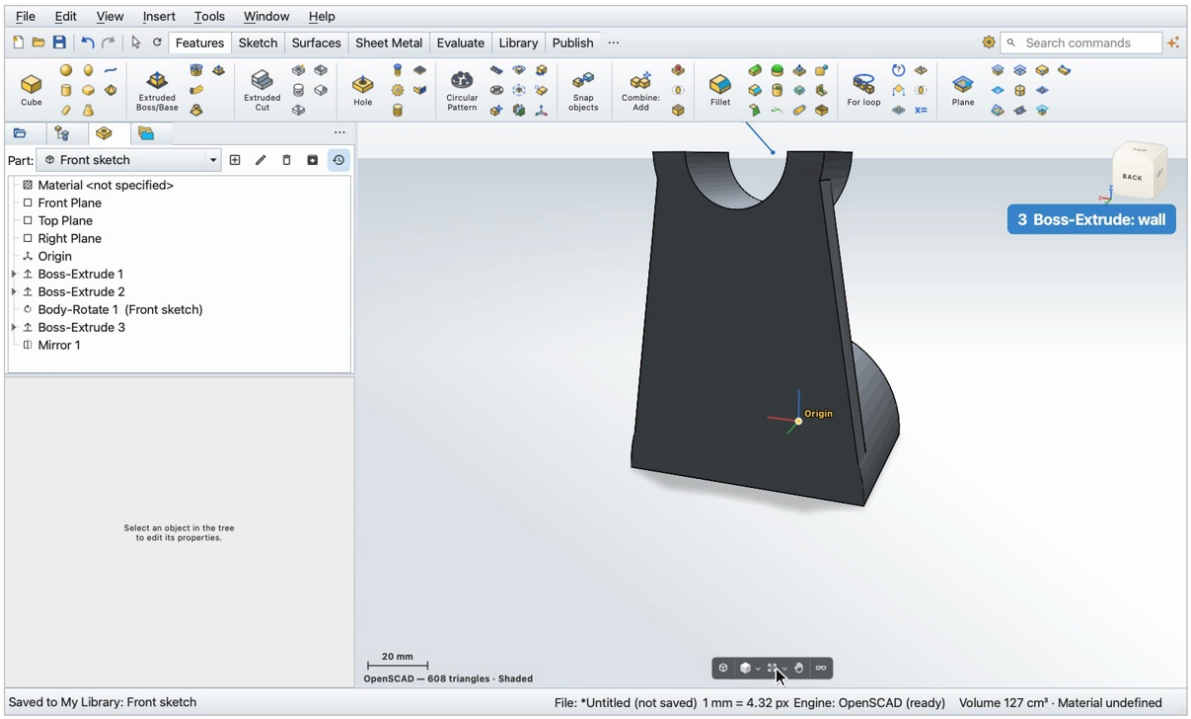

Step 4

A lug on the bottom: a neck twenty five long, forty wide, and a round end forty across whose centre is sixty from the middle; ten thick.

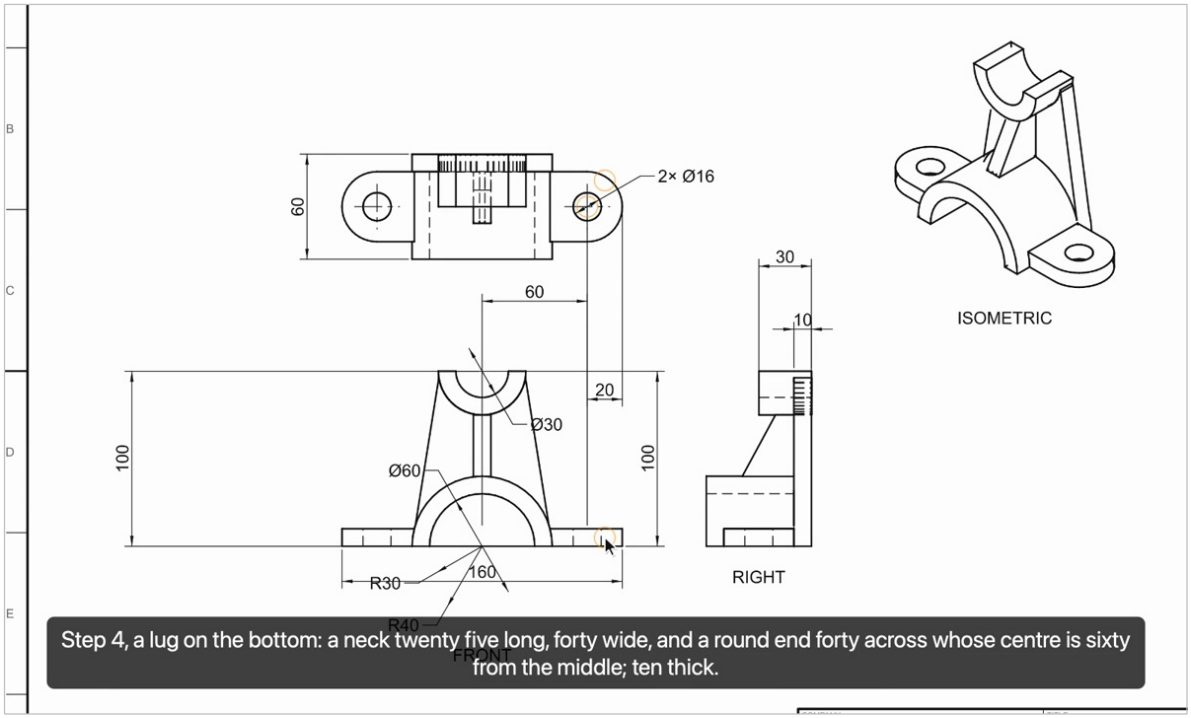

1. Turn underneath, Sketch on the bottom face of the ring.

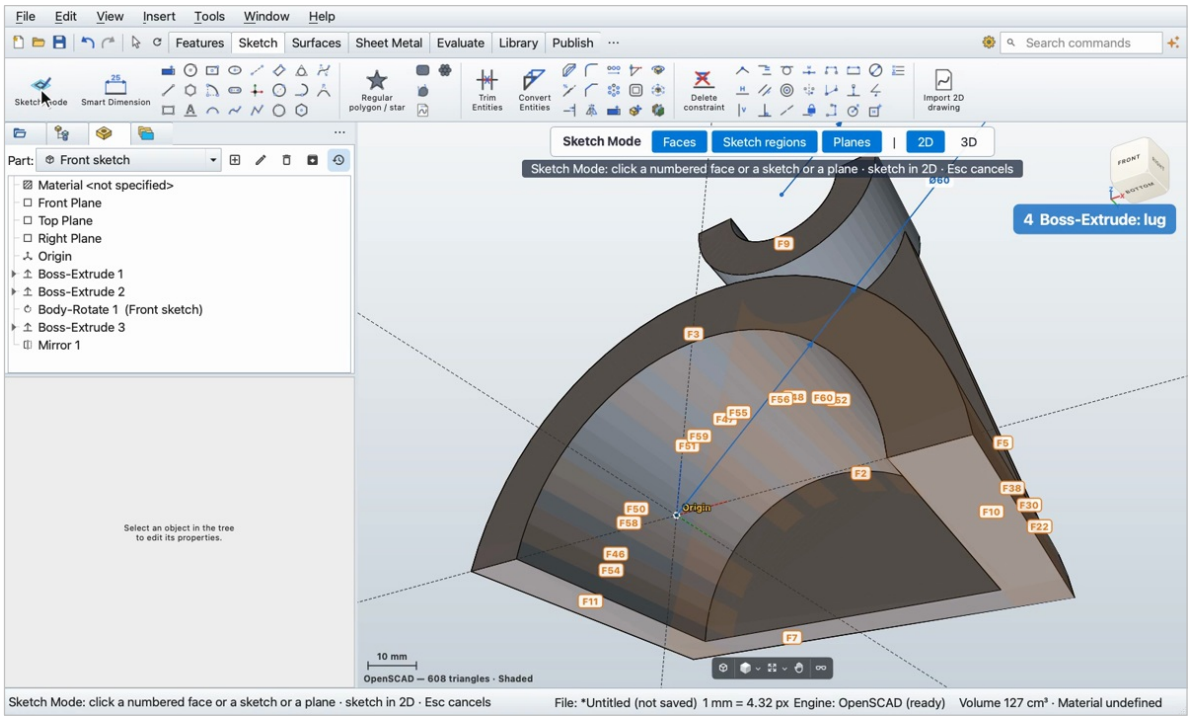

2. Sketch regions off, so the click takes the face.

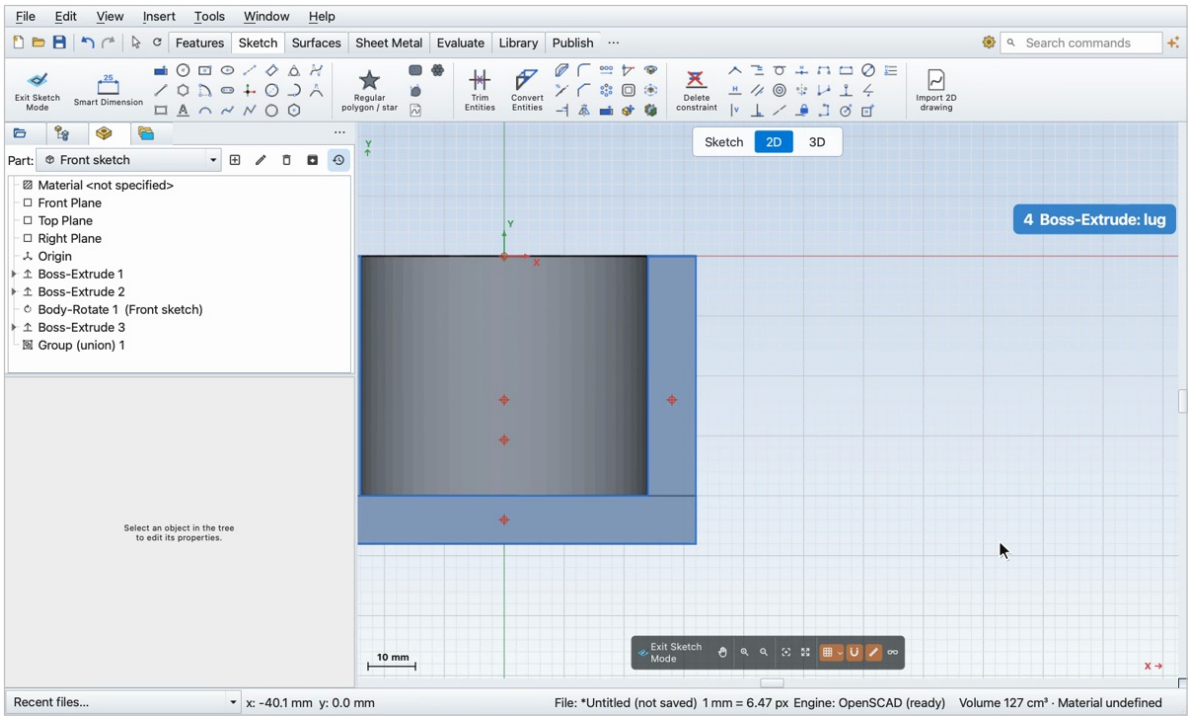

3. A rectangle twenty five by forty, and a circle forty across at its far end.

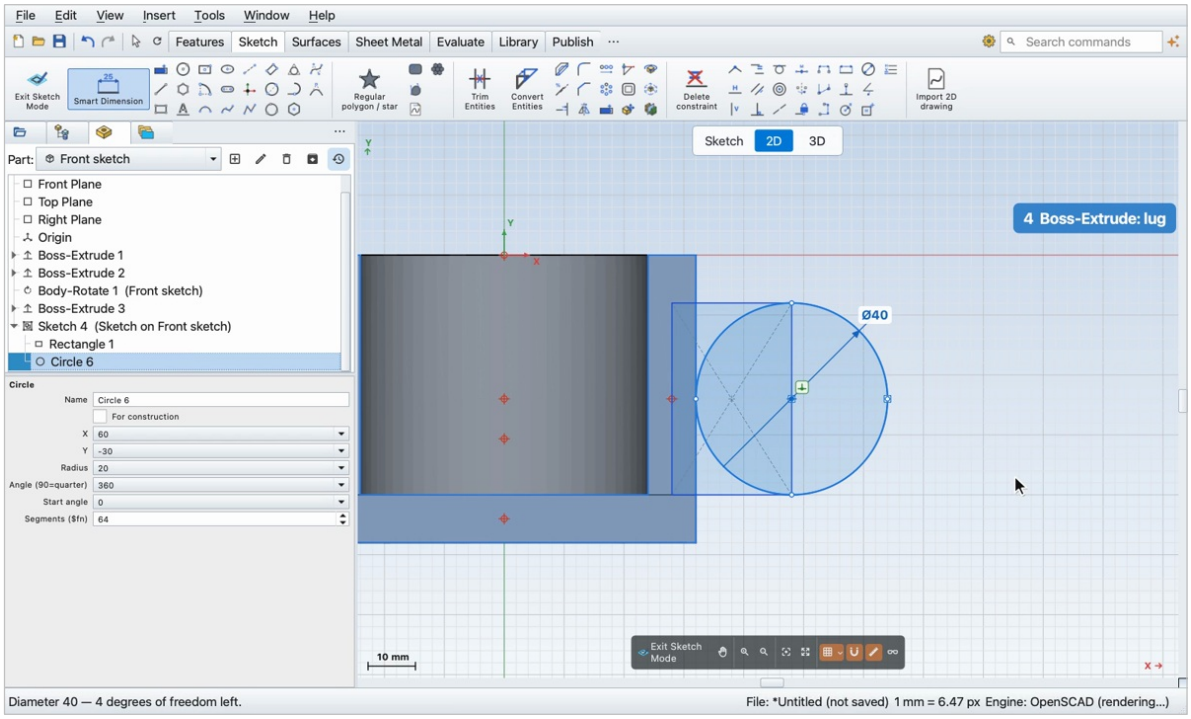

4. Extruded Boss: the three areas, ten, Reverse so it stands up, OK.

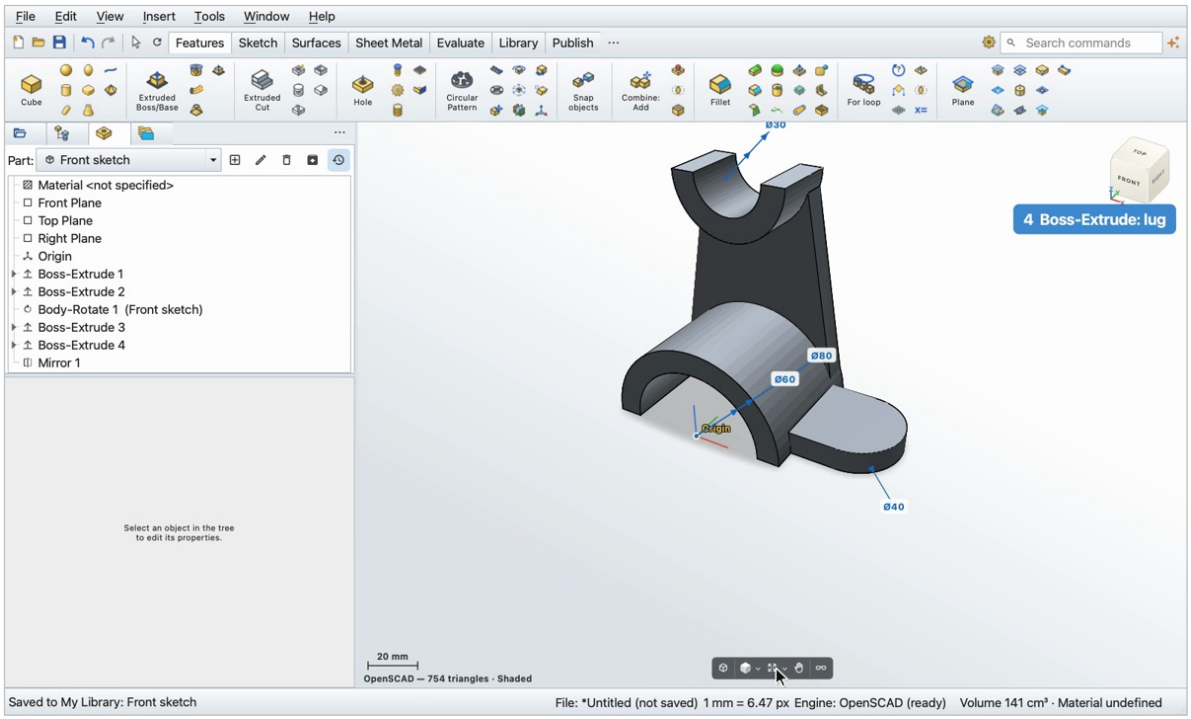

Step 5

The lug mirrored about the Right plane.

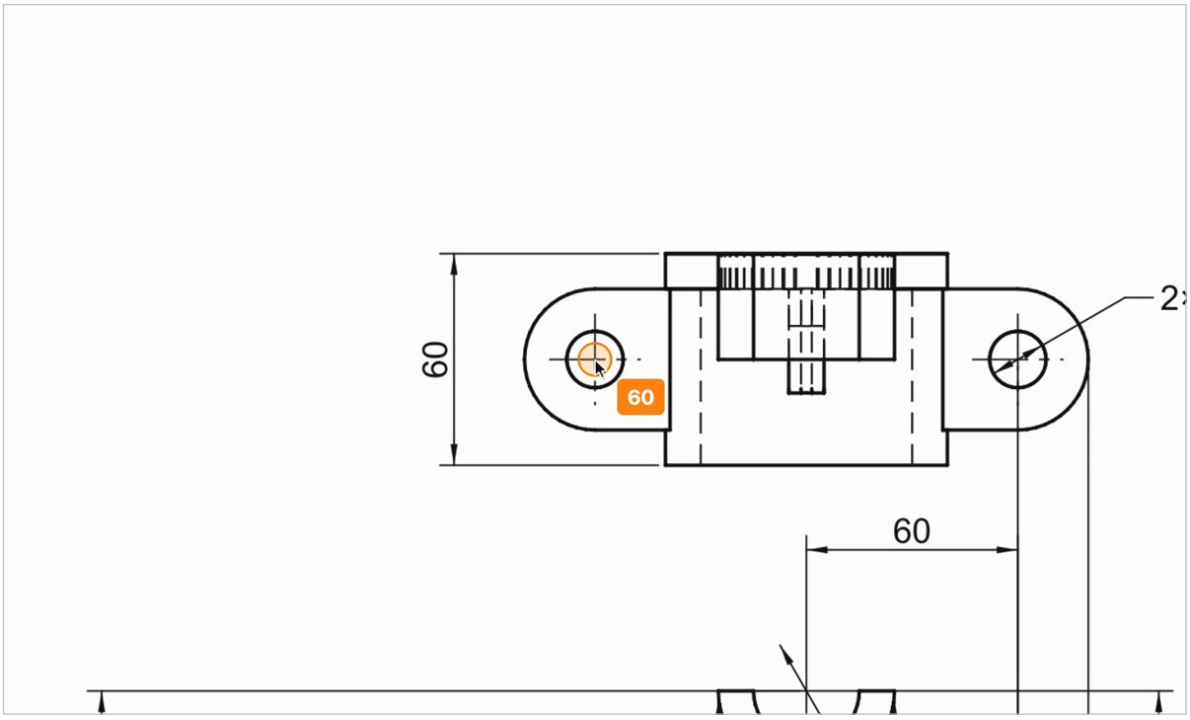

1. Features, Mirror: click the lug in the tree, then the Right Plane, OK.

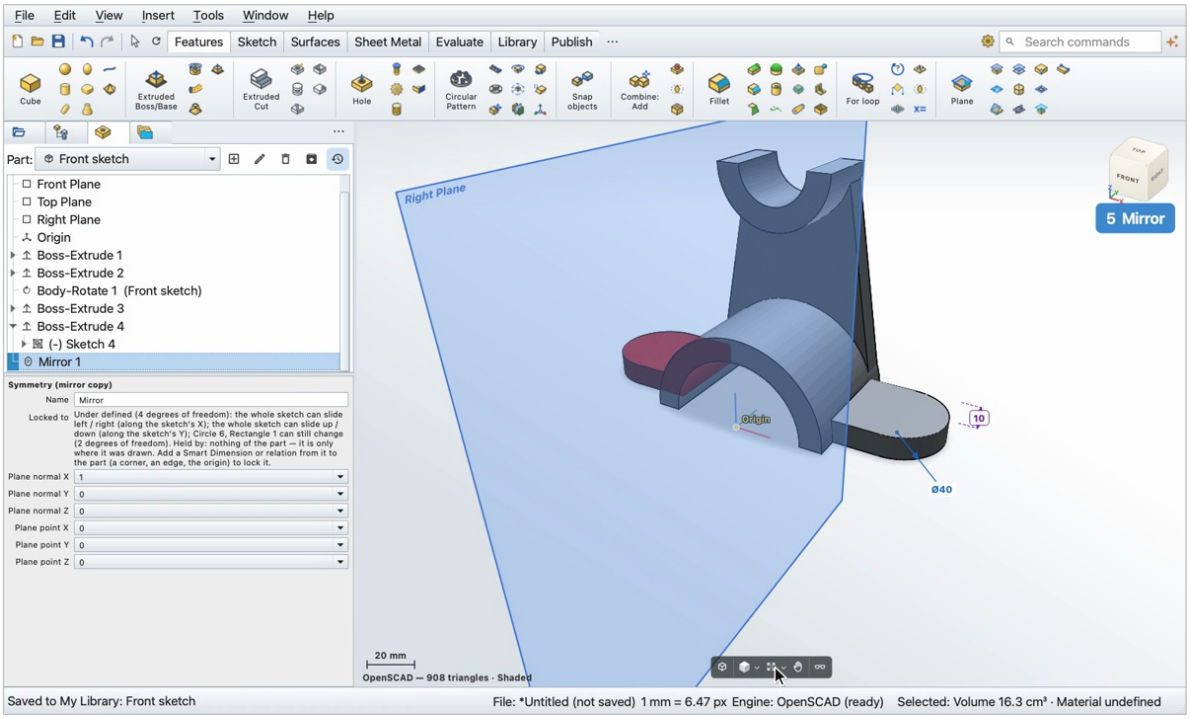

Step 6

Two holes sixteen across at the centres of the lugs, right through.

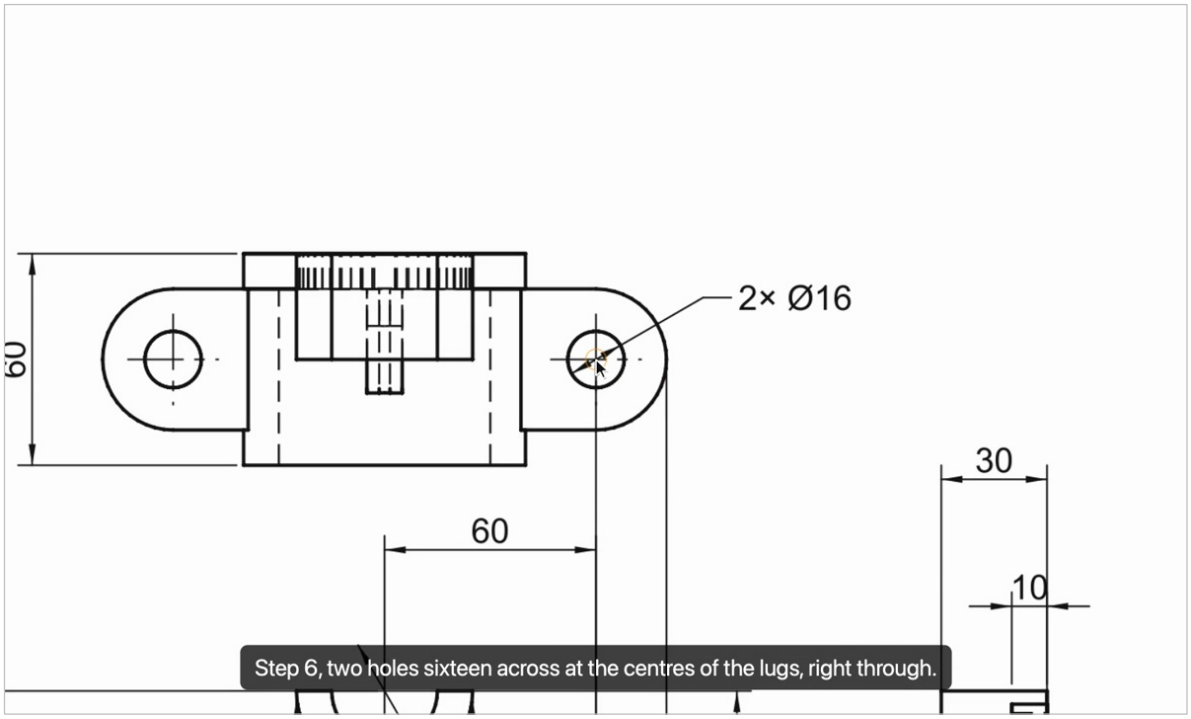

1. Turn to the back, Sketch on the top of a lug: two circles sixteen across at the round ends' centres.

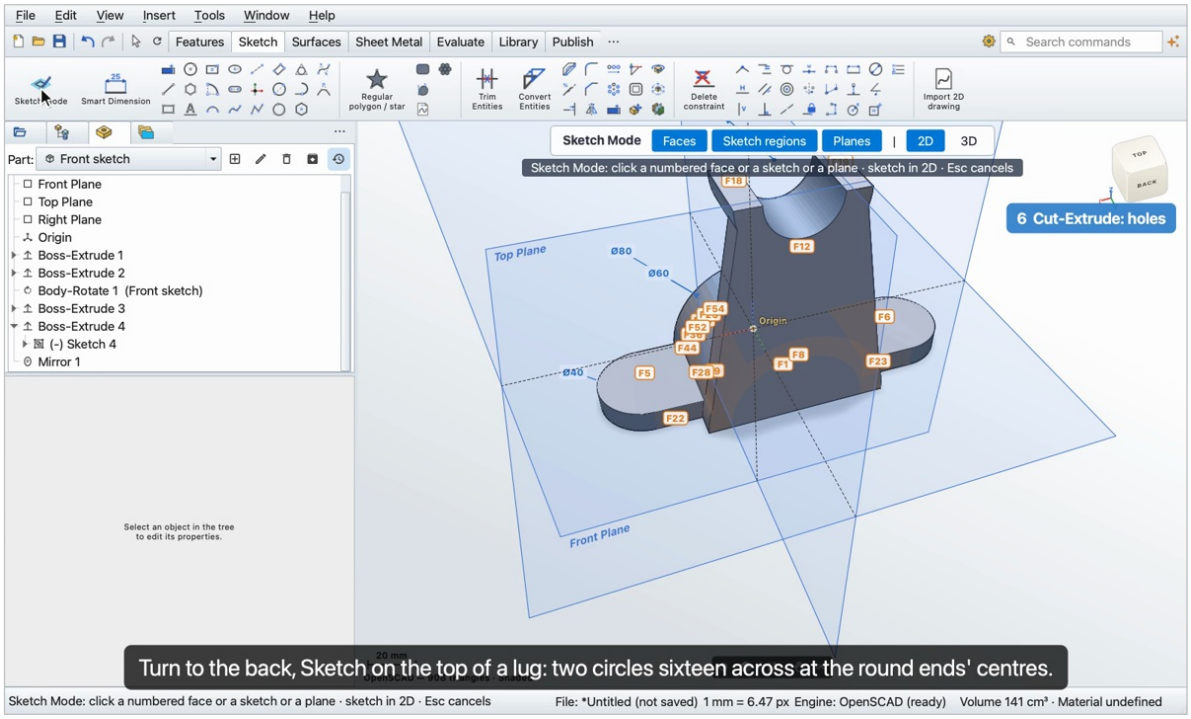

2. Sketch regions off, so the click takes the face.

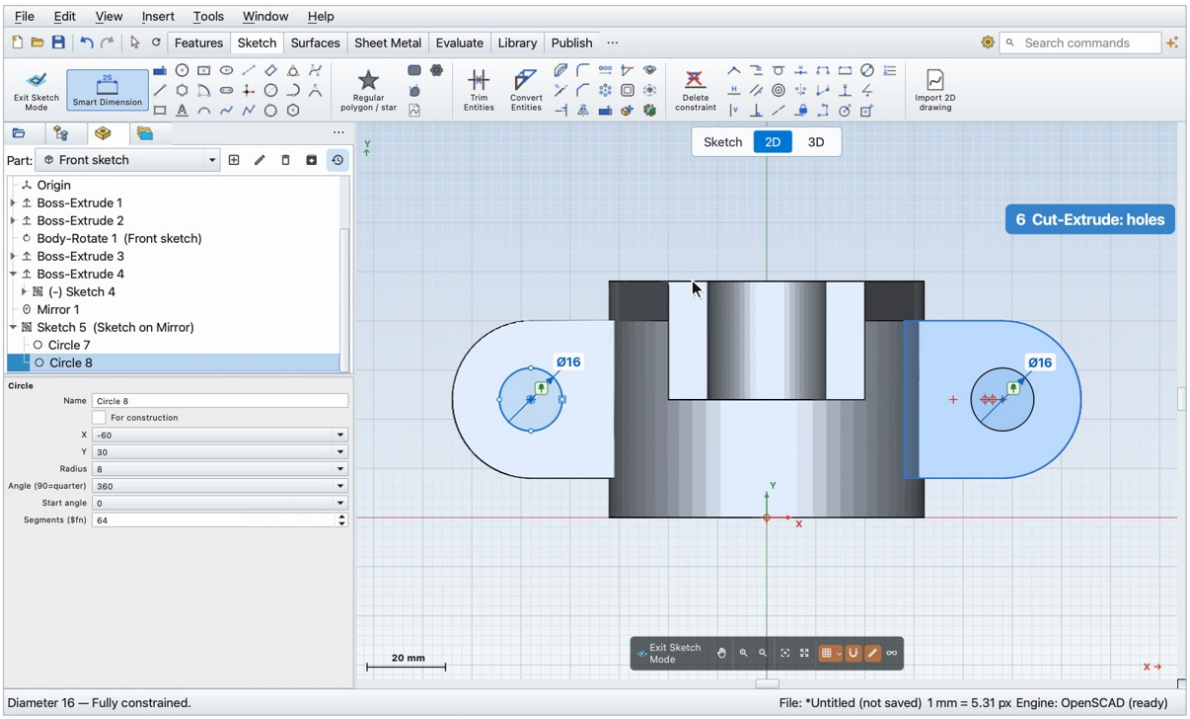

3. Extruded Cut: both circles, Through All, OK.

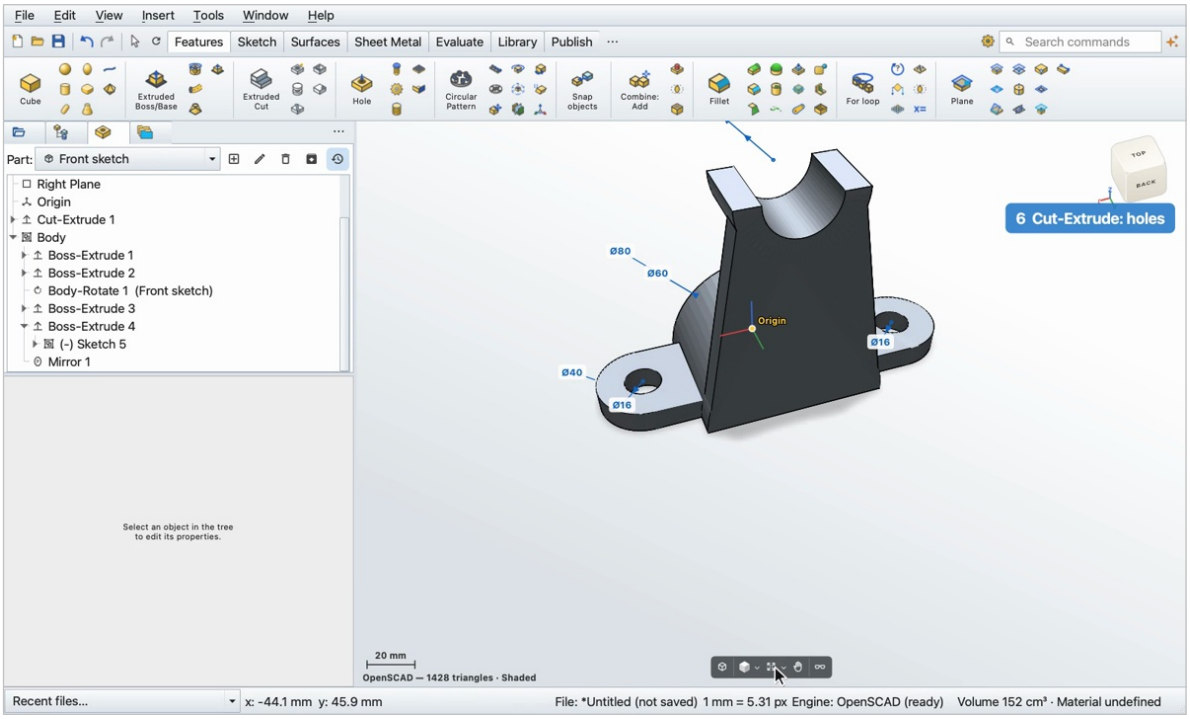

Step 7

The rib on the Right plane: ten thick, from the big ring up to the small one.

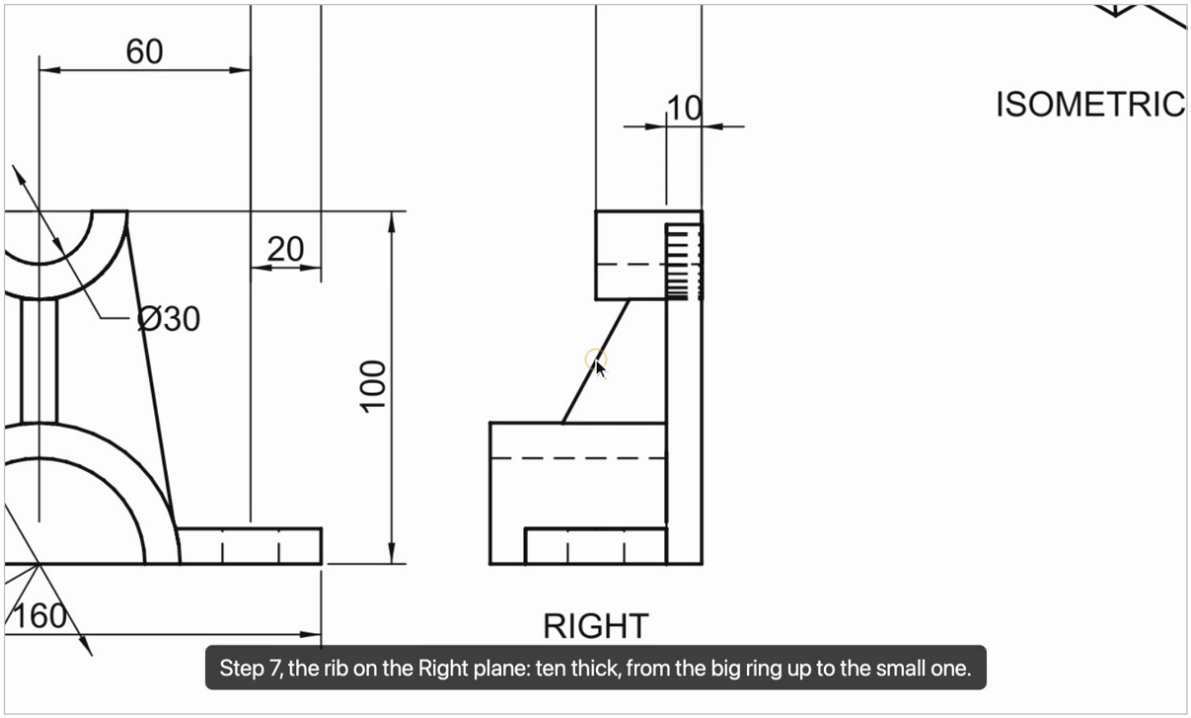

1. Right Plane, Sketch, one line from the big ring to the small ring.

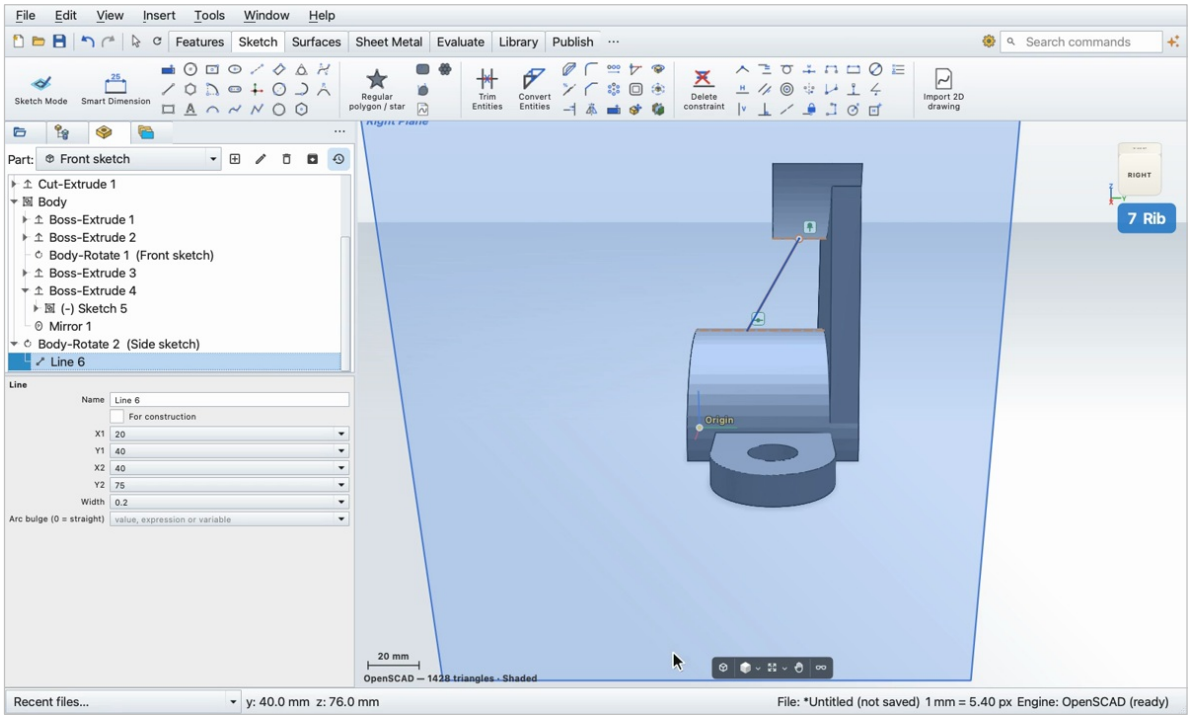

2. Click the sketch in the tree, then Rib: ten thick.

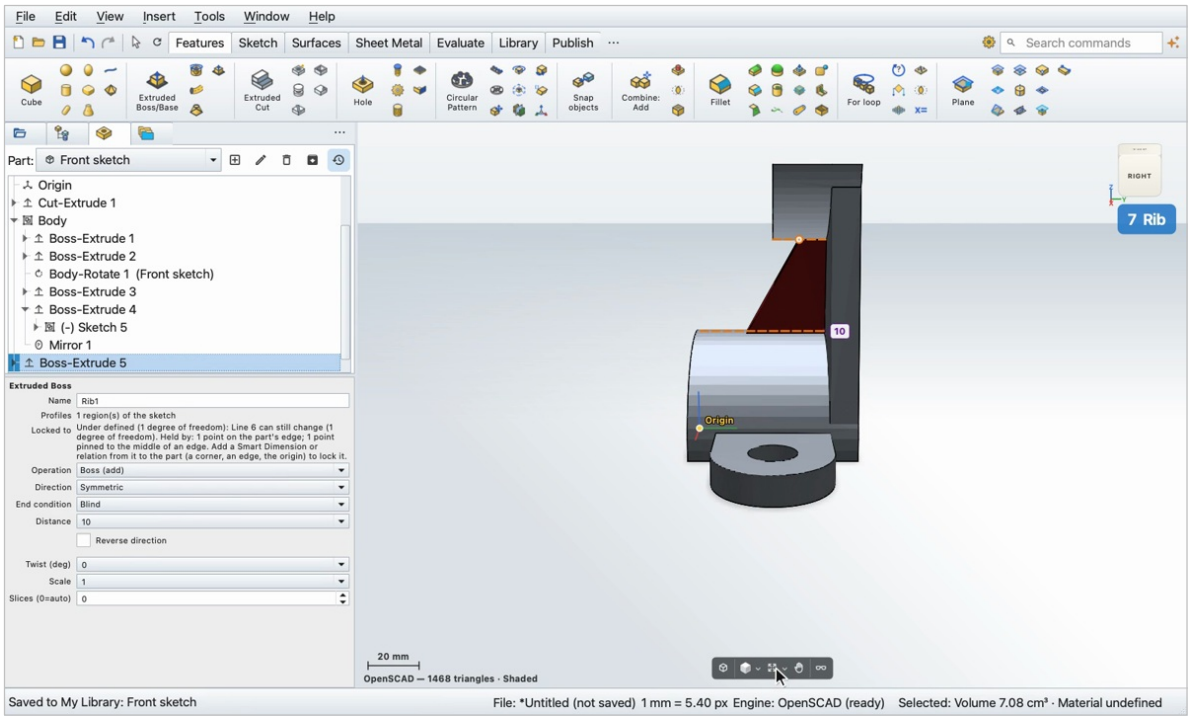

3. The bearing support is done: one hundred and sixty wide, sixty deep, one hundred high.

